US 20220036733A1

(19) United States
(12) Patent Application Publication
Sandbrook
(10) Pub. No.: US 2022/0036733 A1
(43) Pub. Date: Feb. 3, 2022

(54) **VEHICLE FLOW MONITORING SYSTEM**

(71) Applicant: **Frogparking Limited**, Palmerston North (NZ)

(72) Inventor: **Donald H. Sandbrook**, Palmerston North (NZ)

(73) Assignee: **Frogparking Limited**

(21) Appl. No.: **17/502,895**

(22) Filed: **Oct. 15, 2021**

Related U.S. Application Data

(63) Continuation of application No. 16/750,244, filed on Jan. 23, 2020, now Pat. No. 11,151,874.

Publication Classification

(51) **Int. Cl.**
G08G 1/14 (2006.01)
G01S 17/88 (2006.01)

(52) **U.S. Cl.**
CPC ***G08G 1/141*** (2013.01); ***G01S 17/88*** (2013.01)

(57) **ABSTRACT**

A vehicle flow monitoring system for detecting both a car count and direction of movement of vehicles passing a point of interest. The vehicle flow monitoring system generally includes a car counter which may include a microcontroller and a pair of distance sensors. Each of the distance sensors is oriented toward a unique point of interest. Each of the distance sensors includes a threshold distance reading which is used to detect whether a vehicle has passed underneath the car counter. The system may determine direction of travel of the vehicle based on which of the distance sensors is passed by the vehicle first. The microcontroller may assign an Event ID to each time a vehicle passes each of the sensors, with the Event ID being used to identify when and if the vehicle should be counted, or whether a non-vehicle object has passed the car counter.

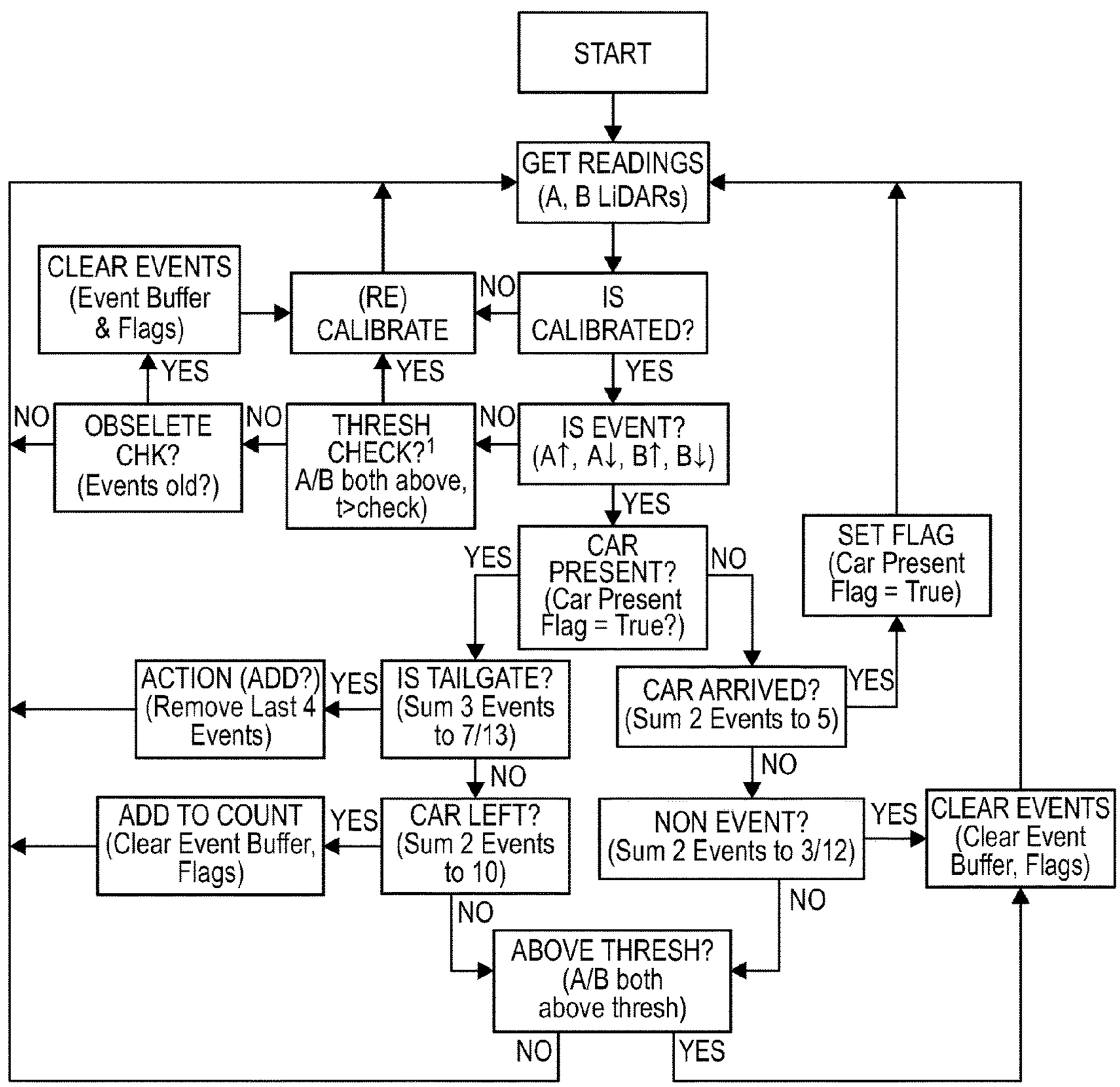

FIG. 1A

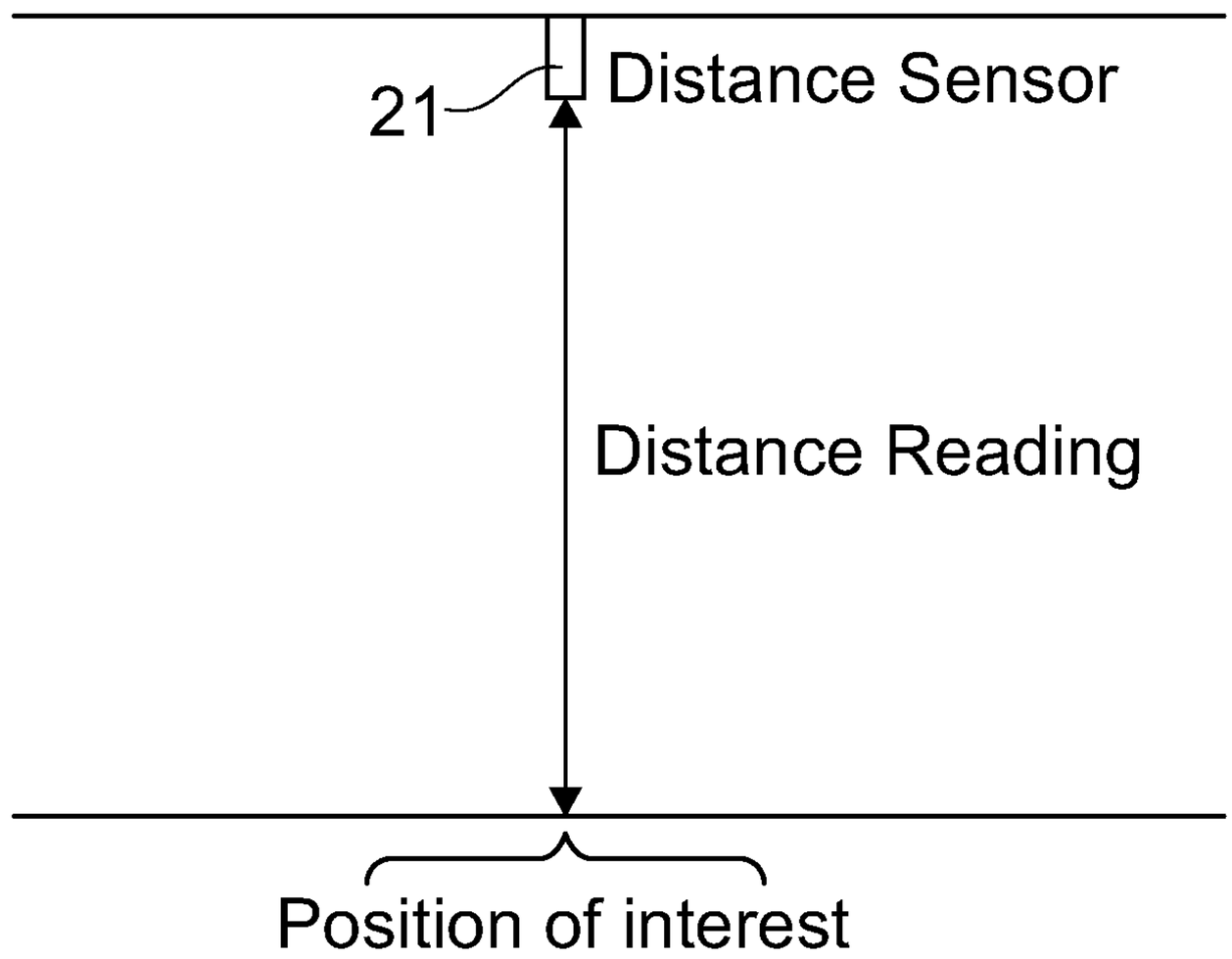
21
Distance Sensor
Distance Reading
Position of interest

FIG. 1B

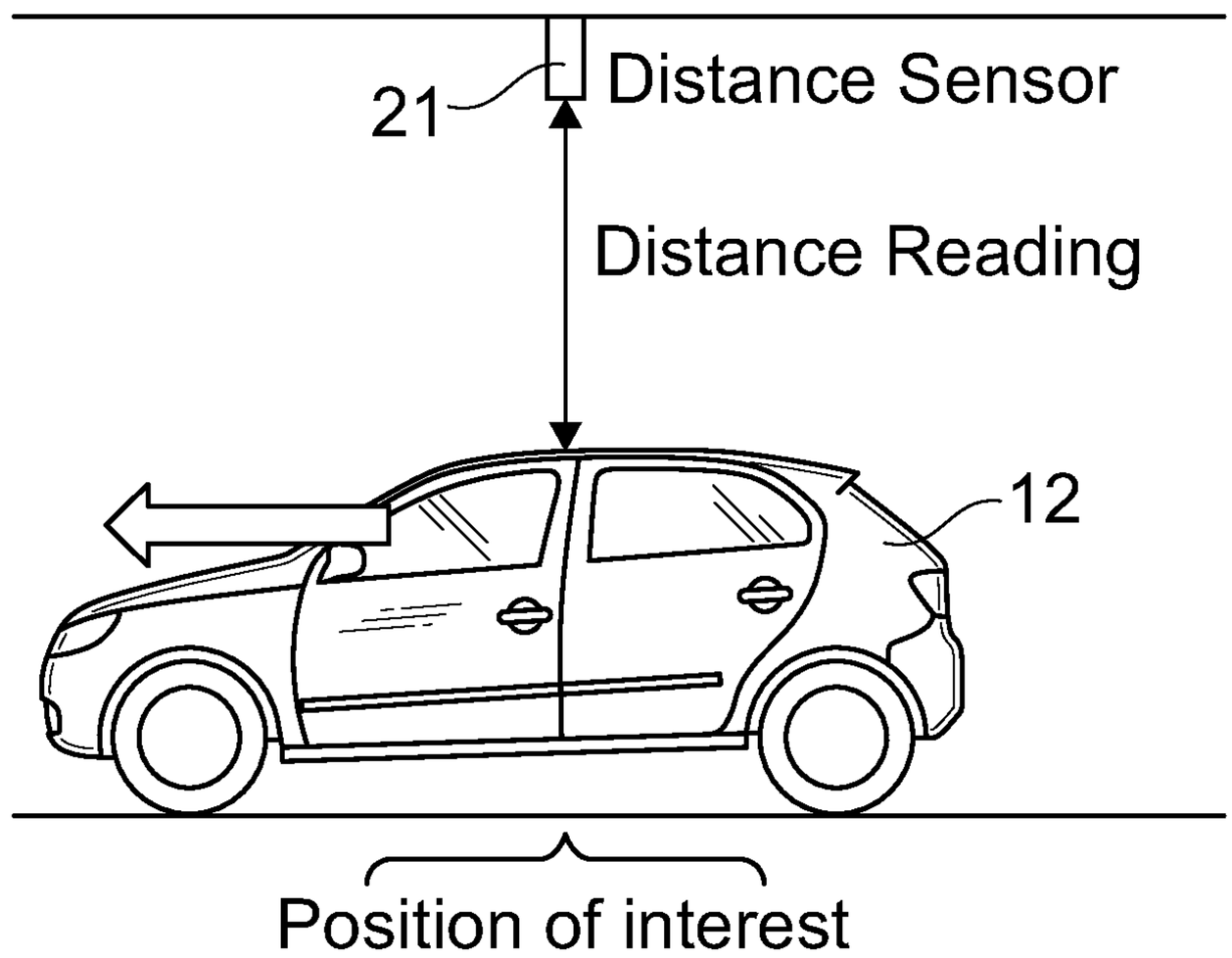
21
Distance Sensor
Distance Reading
12
Position of interest

FIG. 2

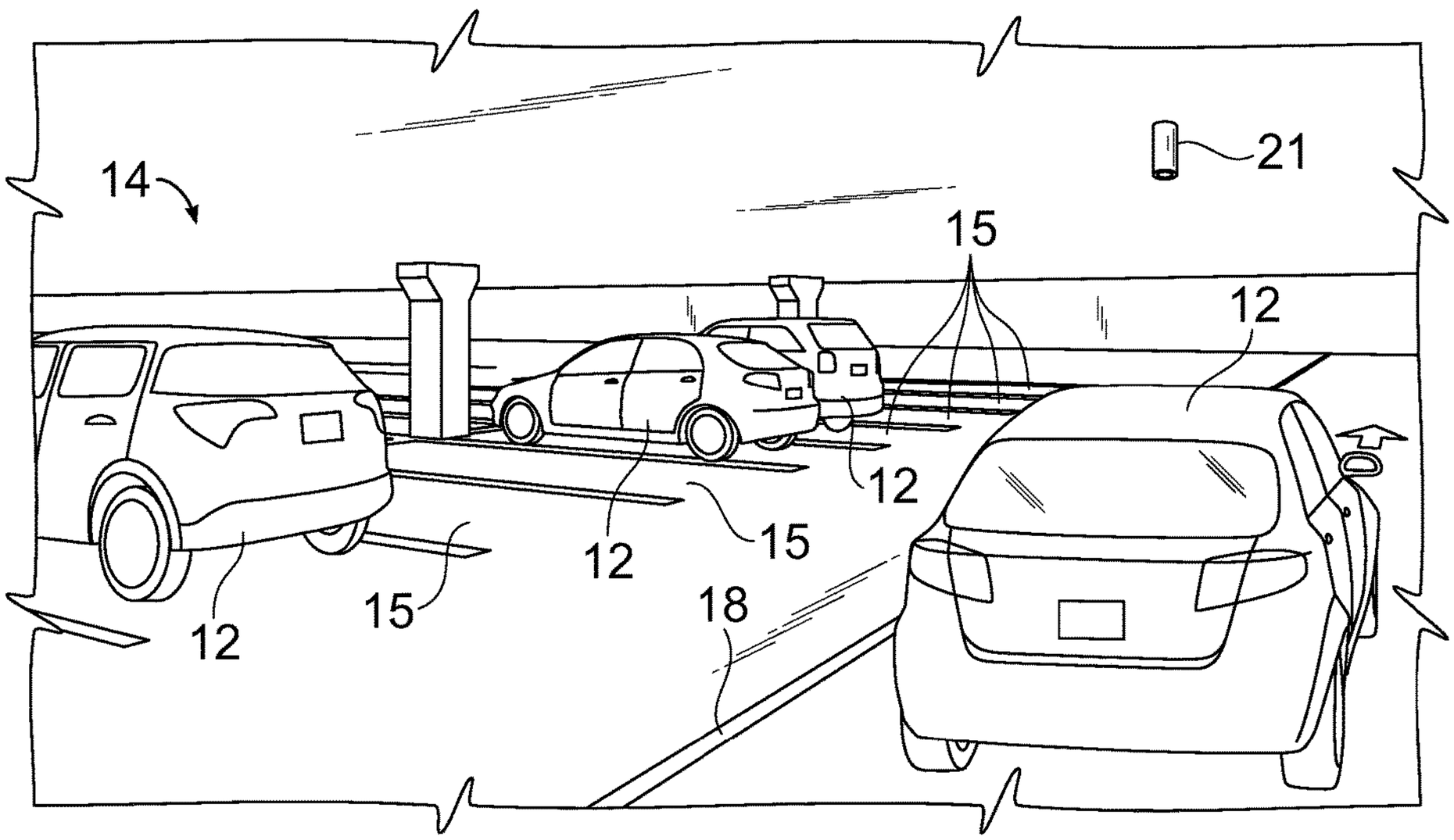

FIG. 3A

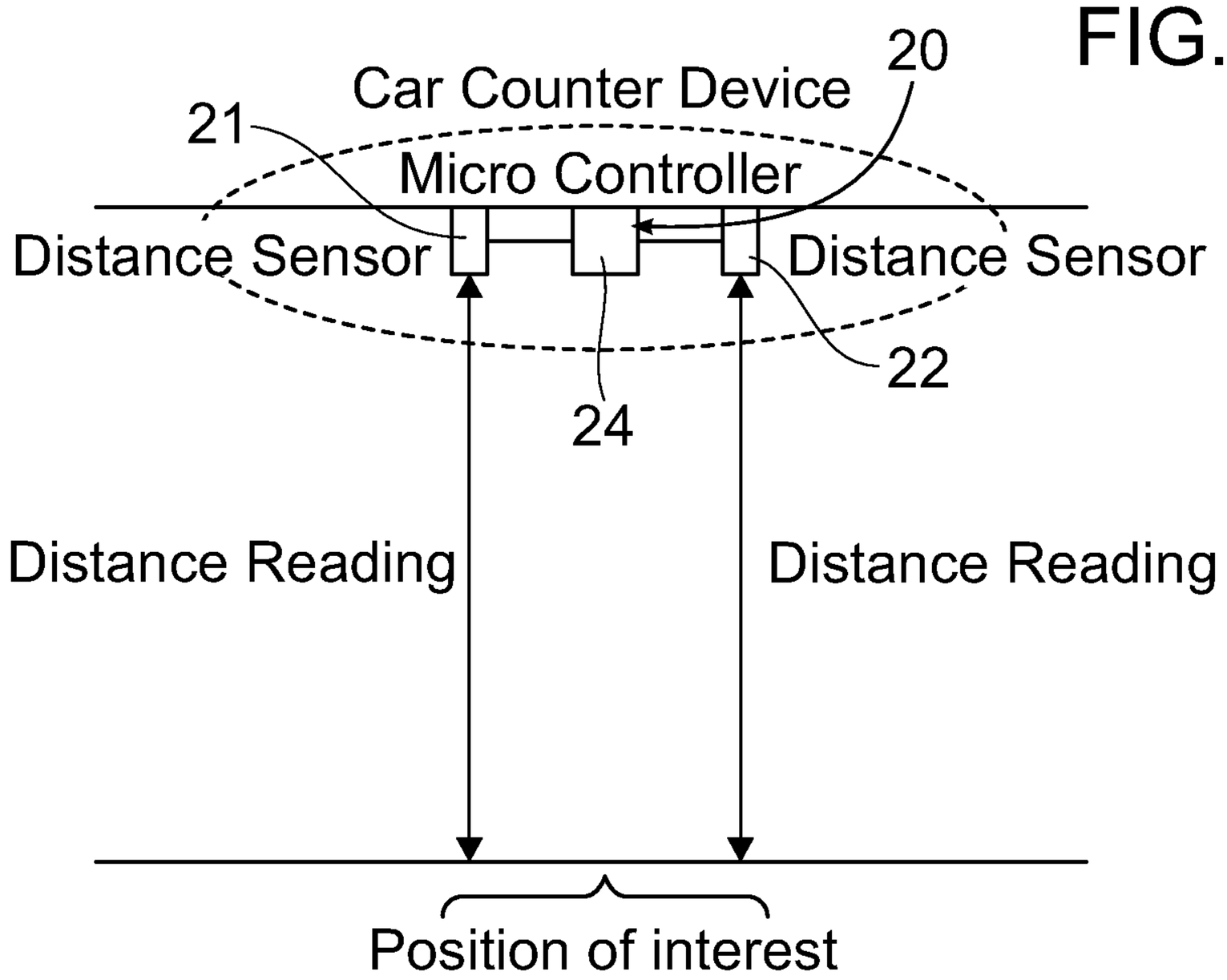
20
Car Counter Device
21
Micro Controller
Distance Sensor
Distance Sensor
22
24
Distance Reading
Distance Reading
Position of interest

FIG. 3B

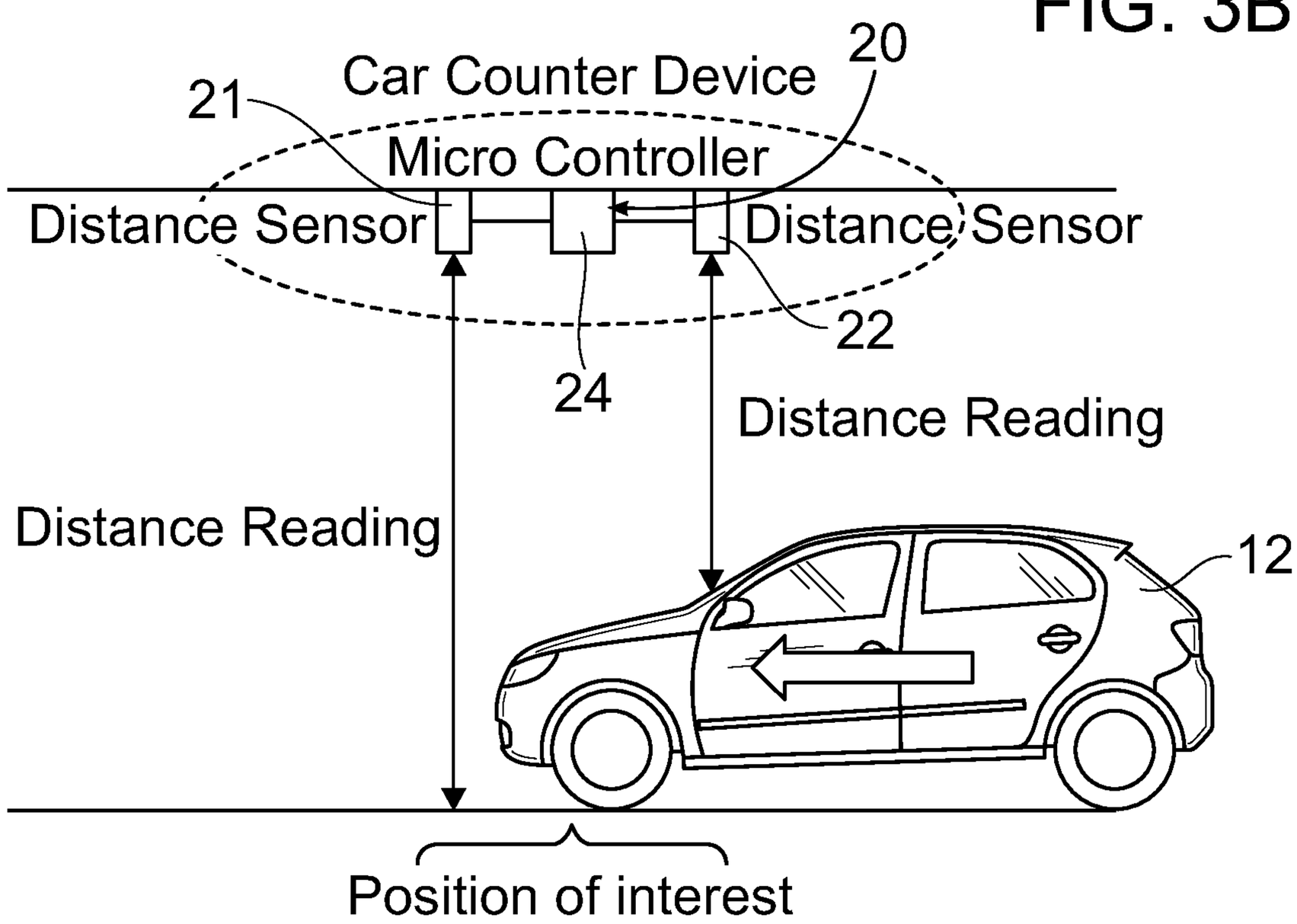
20
Car Counter Device
21
Micro Controller
Distance Sensor
Distance Sensor
22
24
Distance Reading
Distance Reading
12
Position of interest

FIG. 4

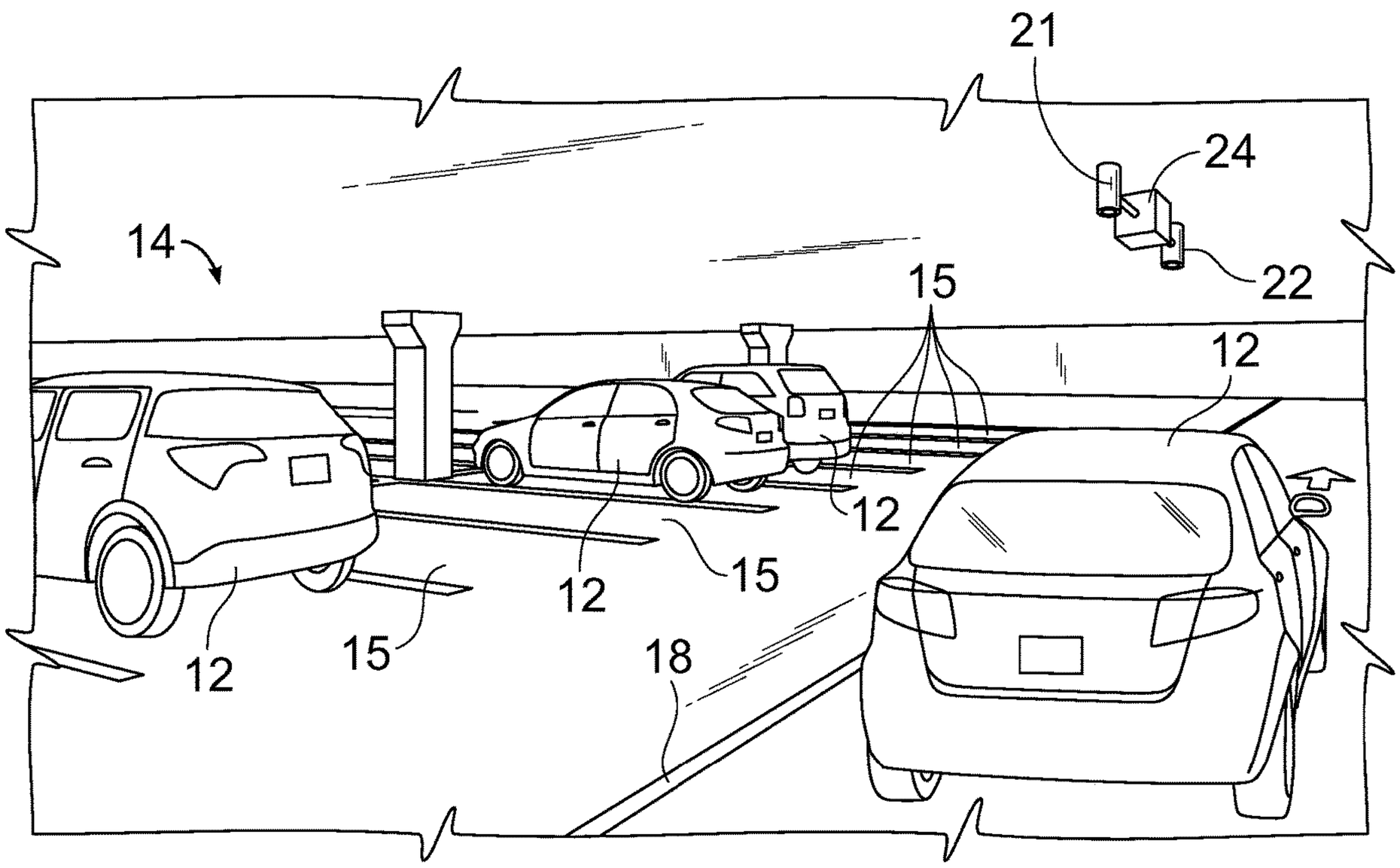

FIG. 5A

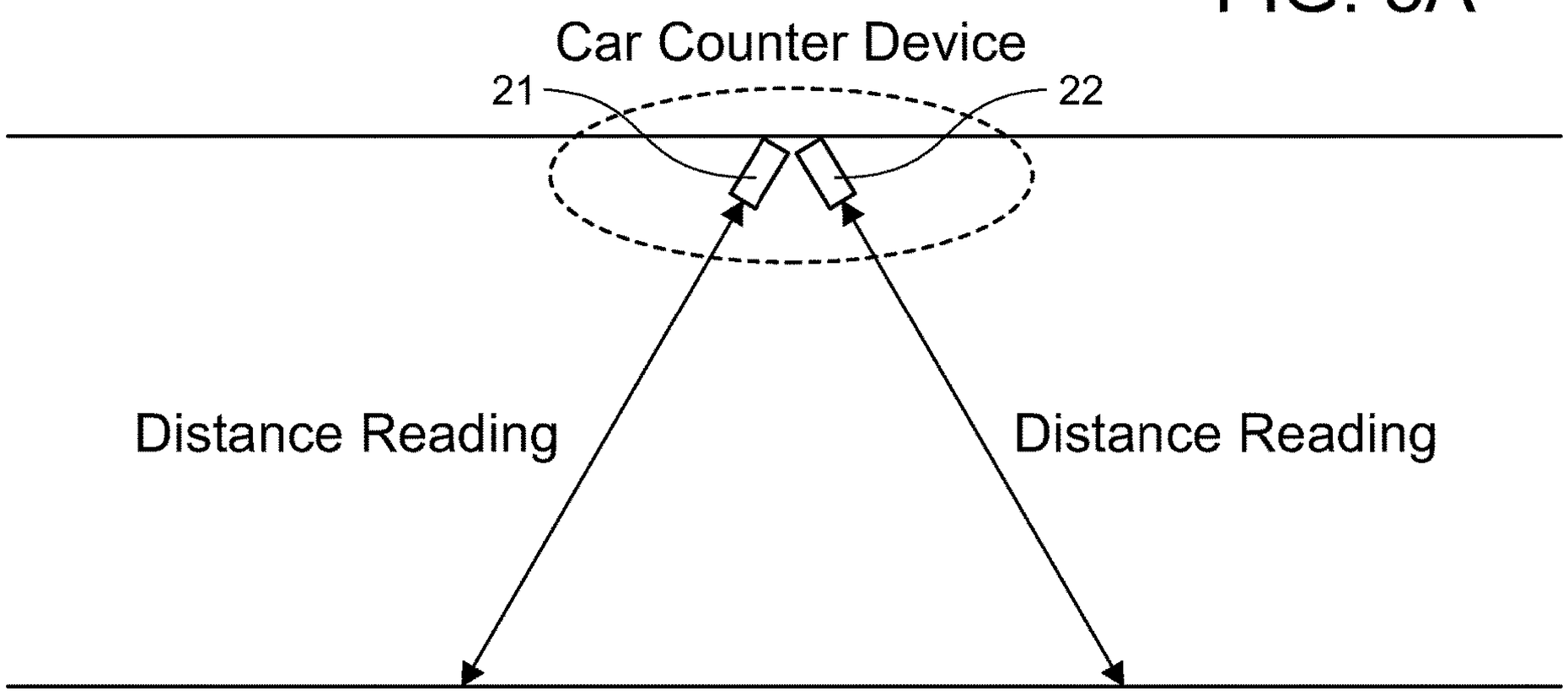
Car Counter Device
21
22
Distance Reading
Distance Reading

FIG. 5B

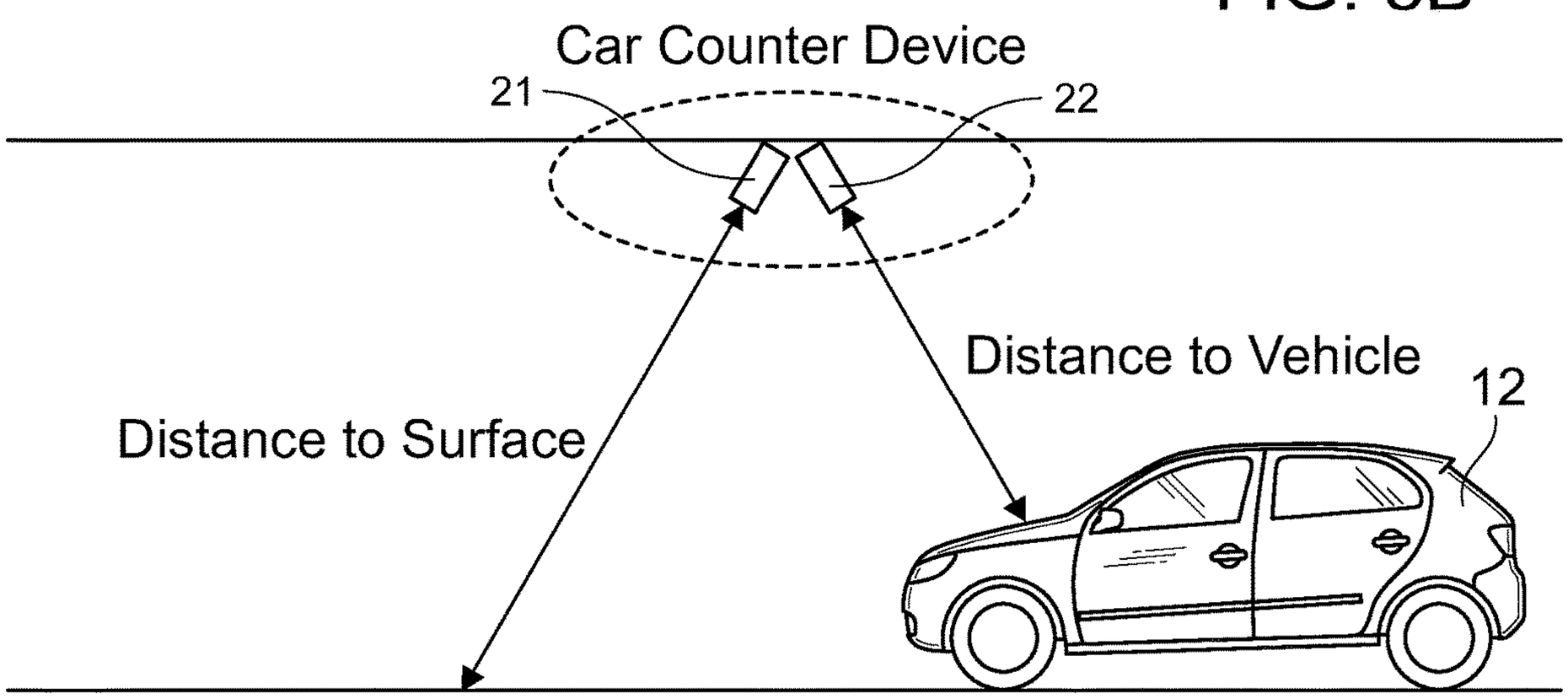
Car Counter Device
21
22
Distance to Vehicle
12
Distance to Surface

FIG. 6

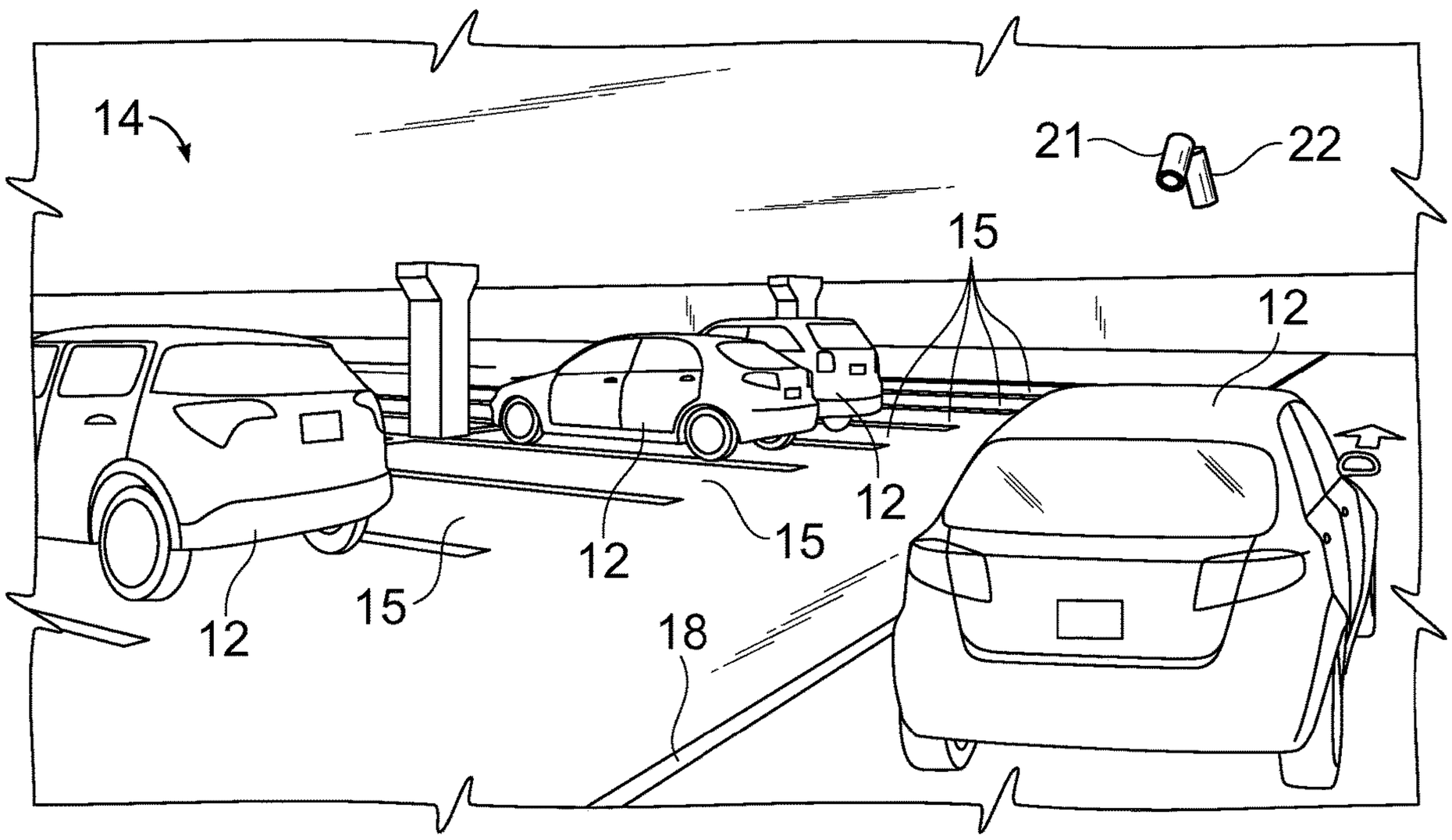

FIG. 7

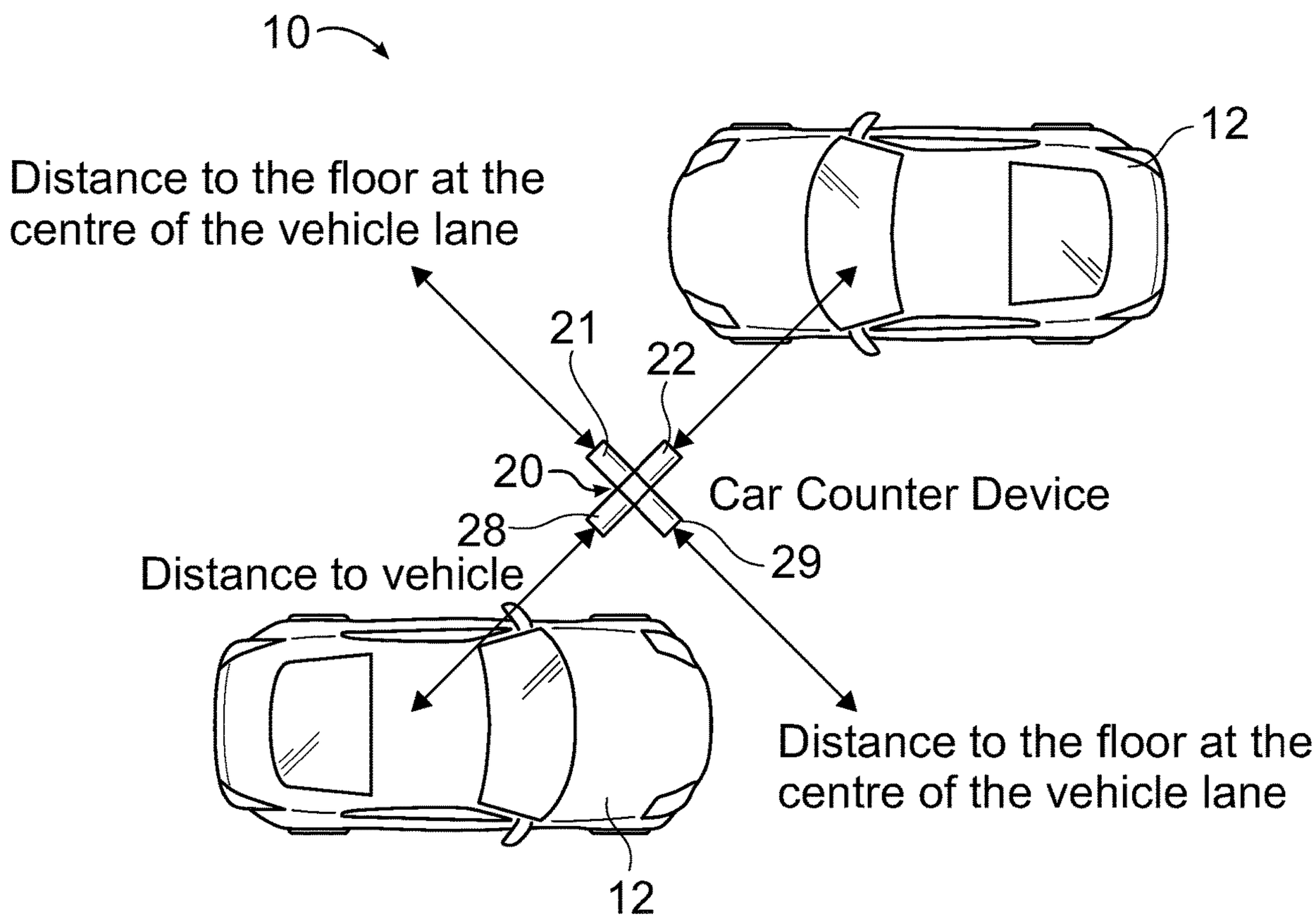
10
12
Distance to the floor at the centre of the vehicle lane
21
22
20
Car Counter Device
28
29
Distance to vehicle
Distance to the floor at the centre of the vehicle lane
12

FIG. 8

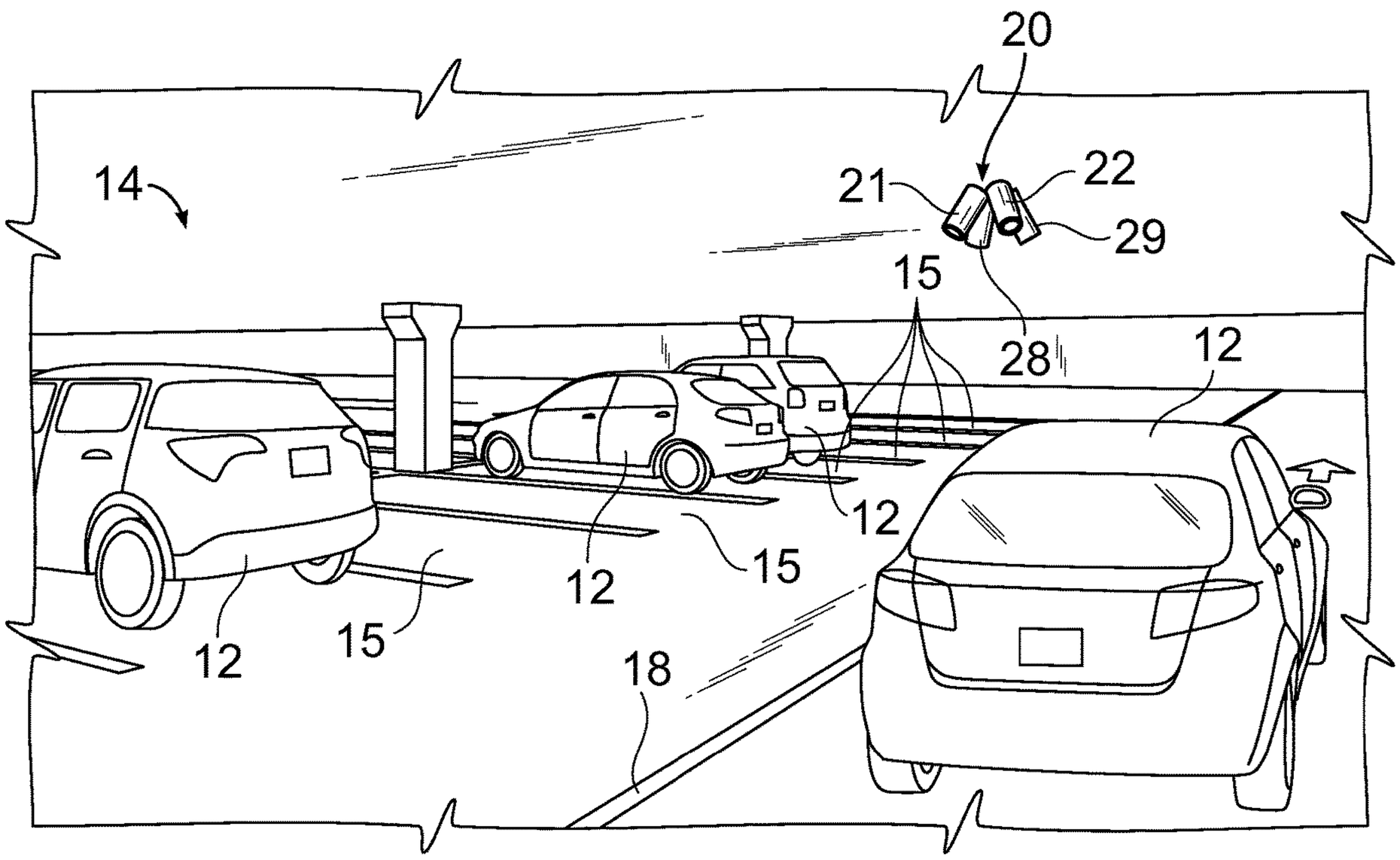

FIG. 9

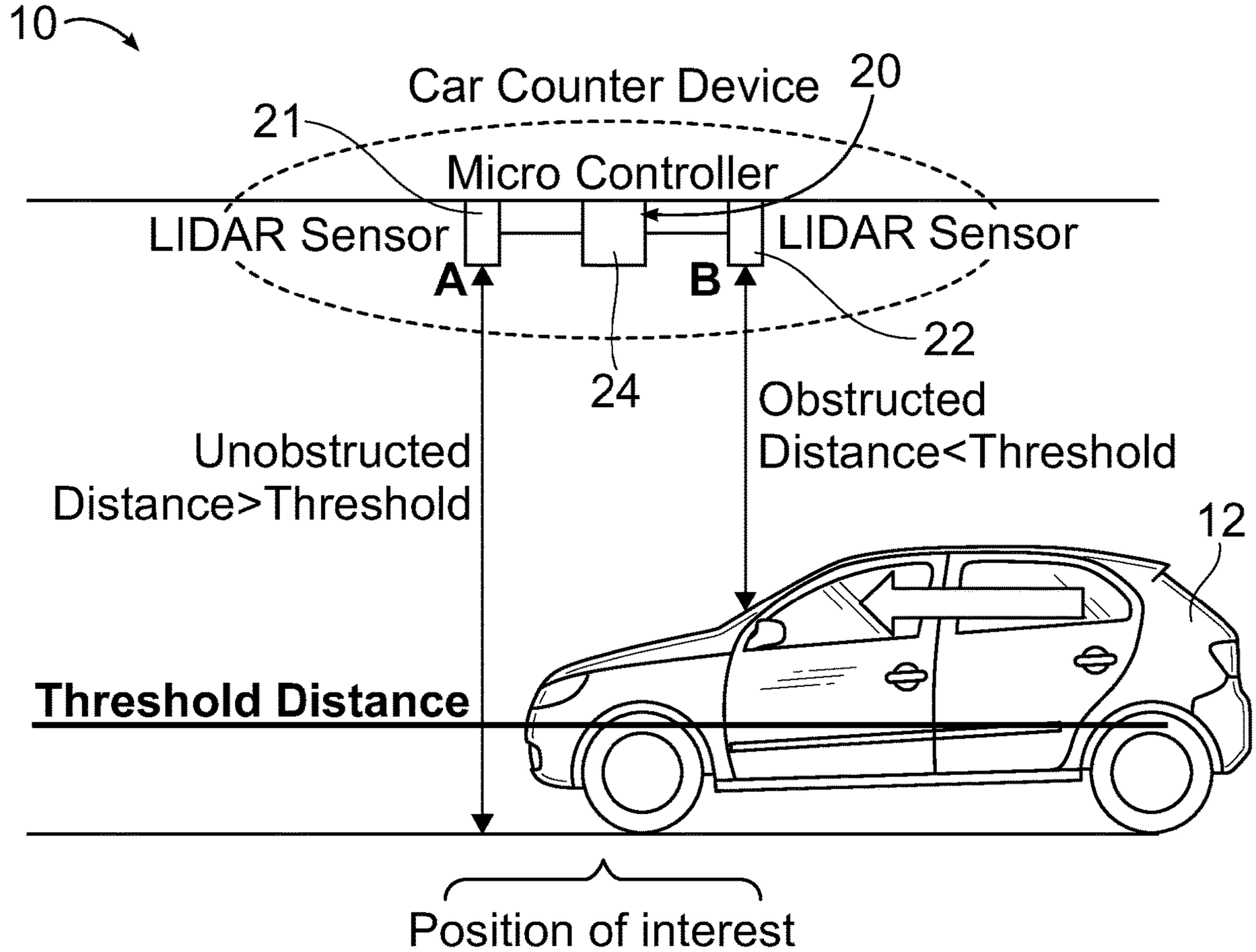
10
Car Counter Device
20
21
Micro Controller
LIDAR Sensor
LIDAR Sensor
A
B
22
24
Obstructed
Distance<Threshold
Unobstructed
Distance>Threshold
12
Threshold Distance
Position of interest

FIG. 10

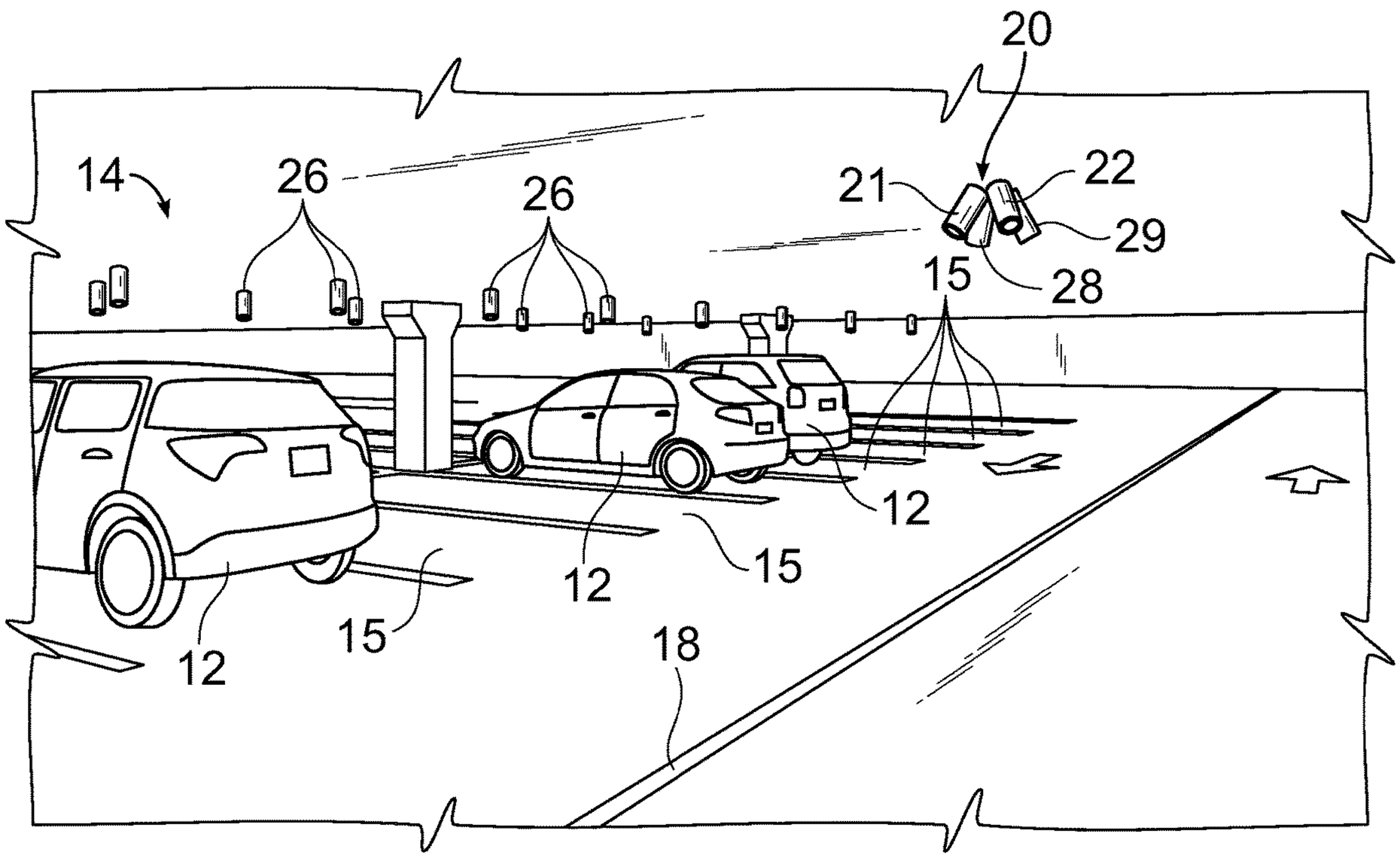

FIG. 11

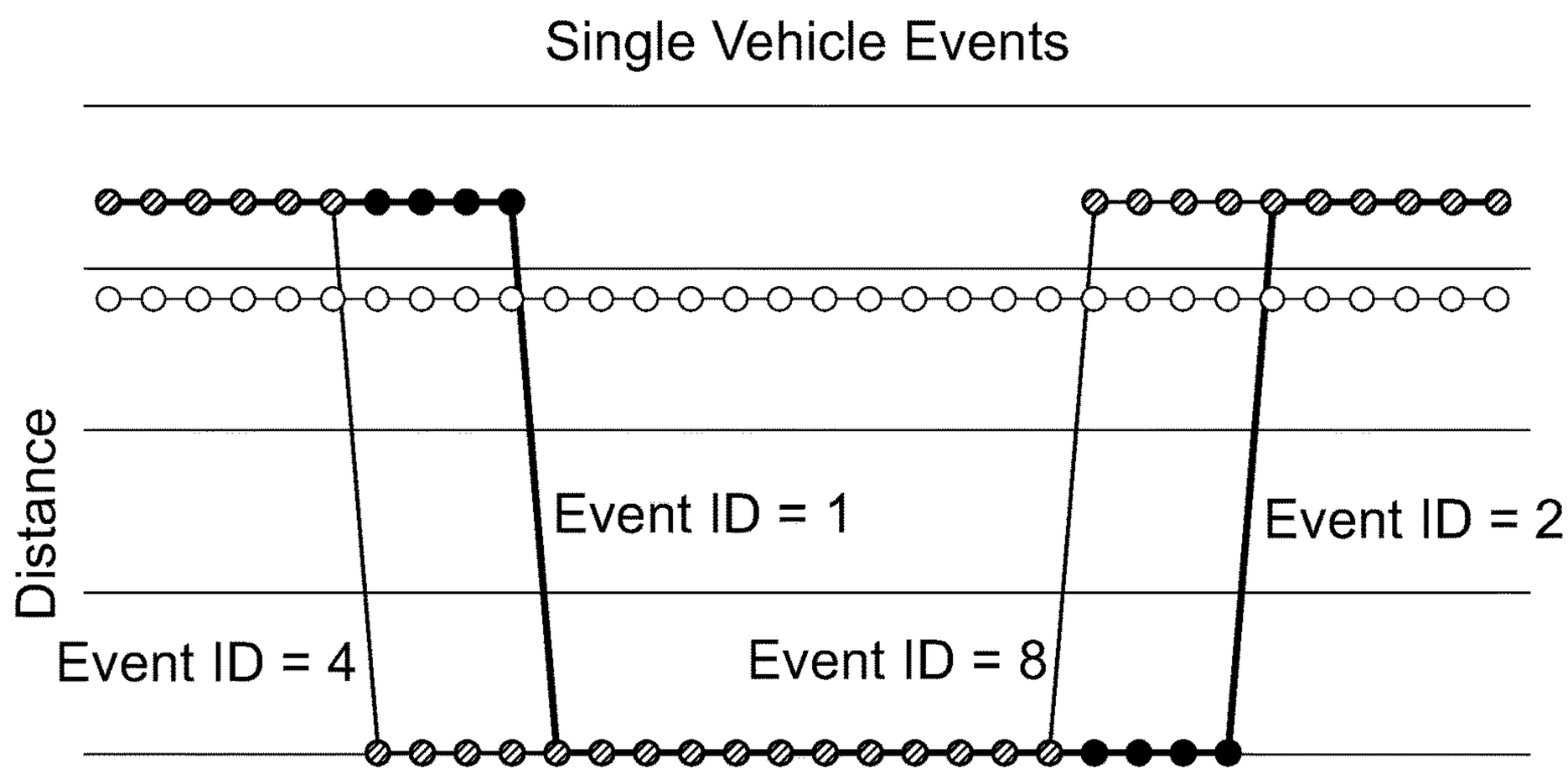
Single Vehicle Events
Distance
Event ID = 1
Event ID = 2
Event ID = 4
Event ID = 8
Time
Sensor A
Sensor B
Threshold

FIG. 12

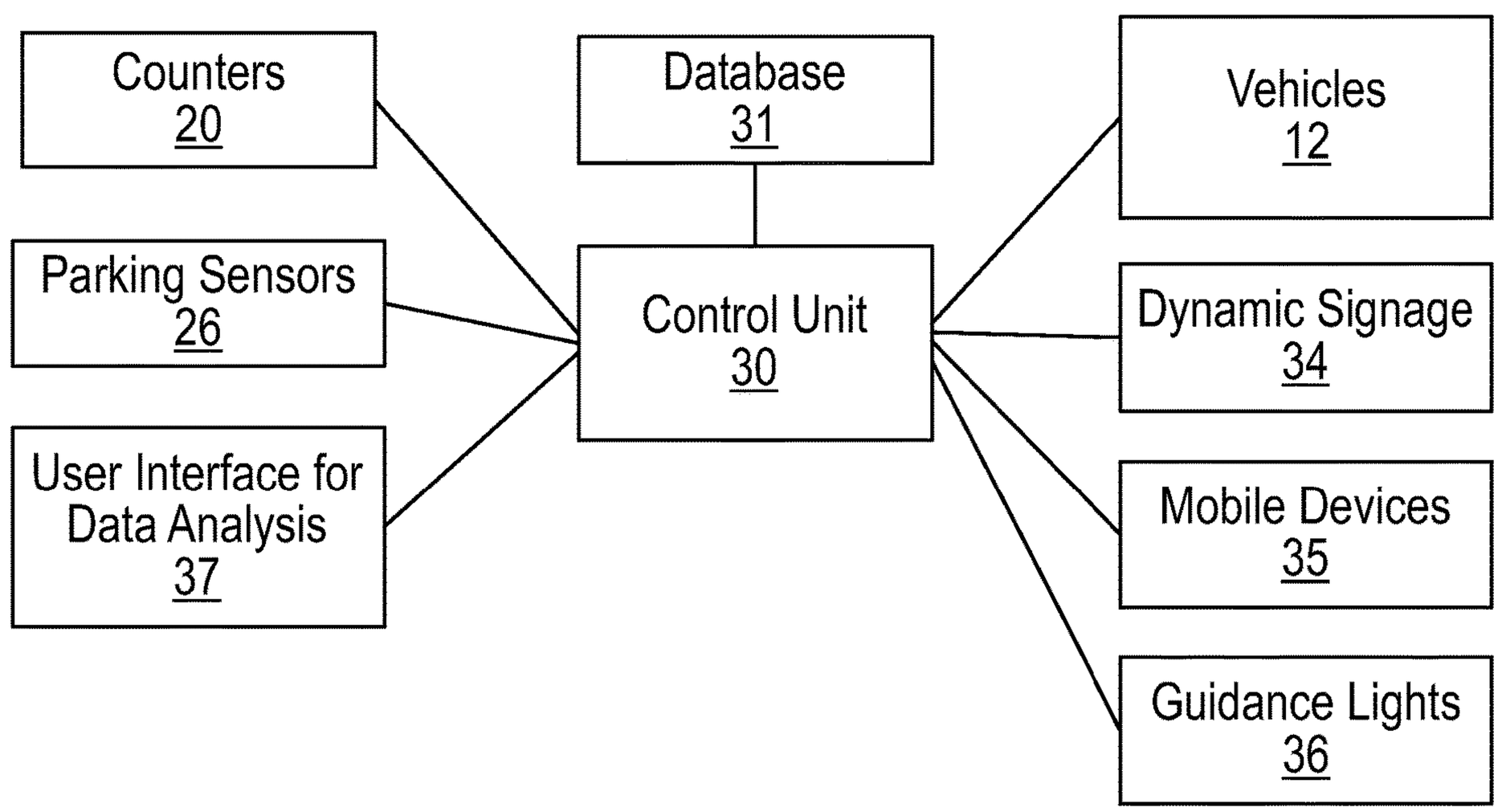
10
Counters
20
Parking Sensors
26
User Interface for
Data Analysis
37
Database
31
Control Unit
30
Vehicles
12
Dynamic Signage
34
Mobile Devices
35
Guidance Lights
36

FIG. 13

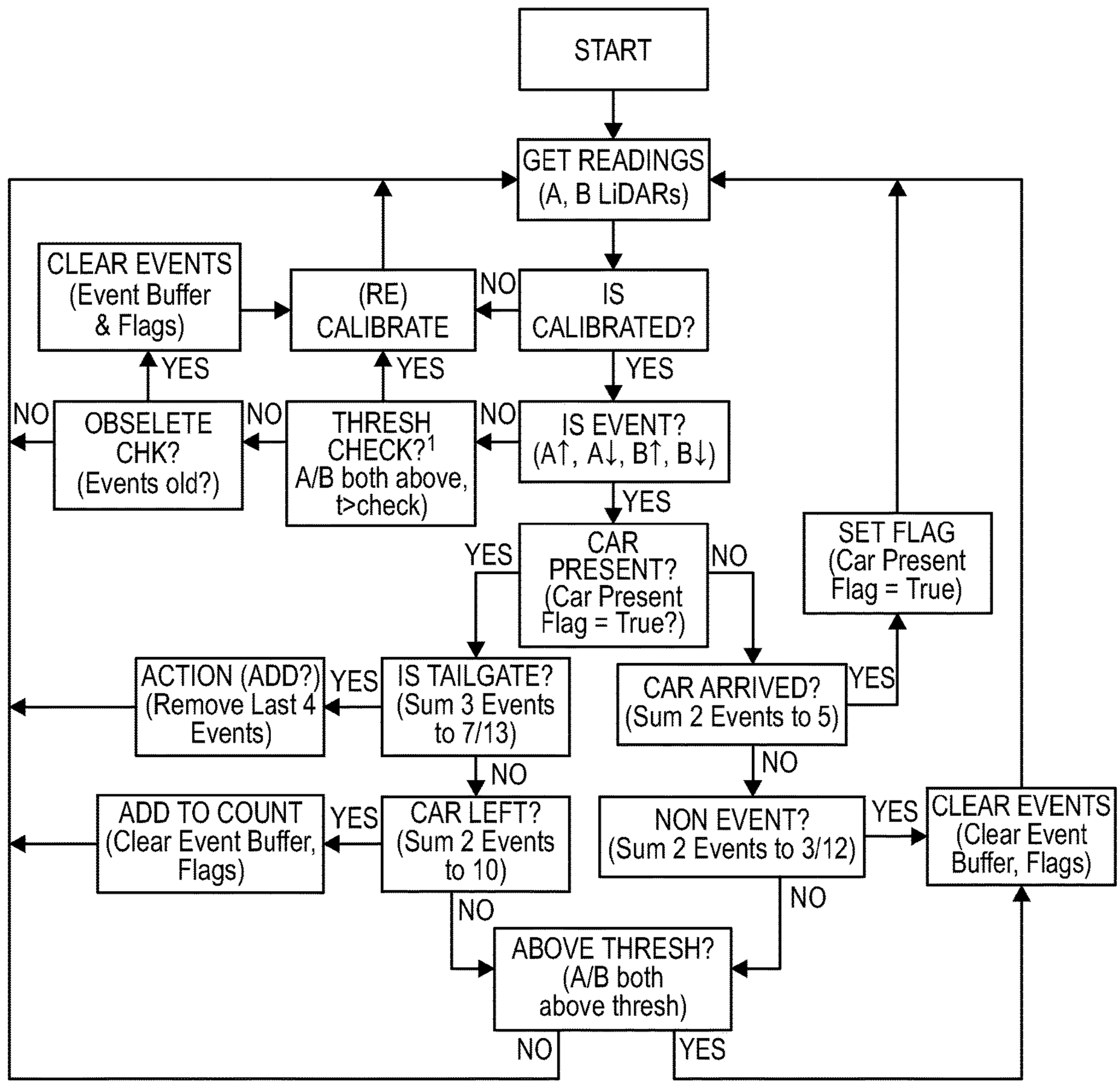
START
GET READINGS (A, B LiDARs)
IS CALIBRATED?
NO
(RE) CALIBRATE
CLEAR EVENTS (Event Buffer & Flags)
YES
YES
YES
IS EVENT? (A↑, A↓, B↑, B↓)
NO
THRESH CHECK?1 A/B both above, t>check)
NO
OBSELETE CHK? (Events old?)
NO
YES
CAR PRESENT? (Car Present Flag = True?)
YES
NO
SET FLAG (Car Present Flag = True)
IS TAILGATE? (Sum 3 Events to 7/13)
YES
ACTION (ADD?) (Remove Last 4 Events)
CAR ARRIVED? (Sum 2 Events to 5)
YES
NO
CAR LEFT? (Sum 2 Events to 10)
YES
ADD TO COUNT (Clear Event Buffer, Flags)
NON EVENT? (Sum 2 Events to 3/12)
YES
CLEAR EVENTS (Clear Event Buffer, Flags)
NO
NO
ABOVE THRESH? (A/B both above thresh)
NO
YES

FIG. 14

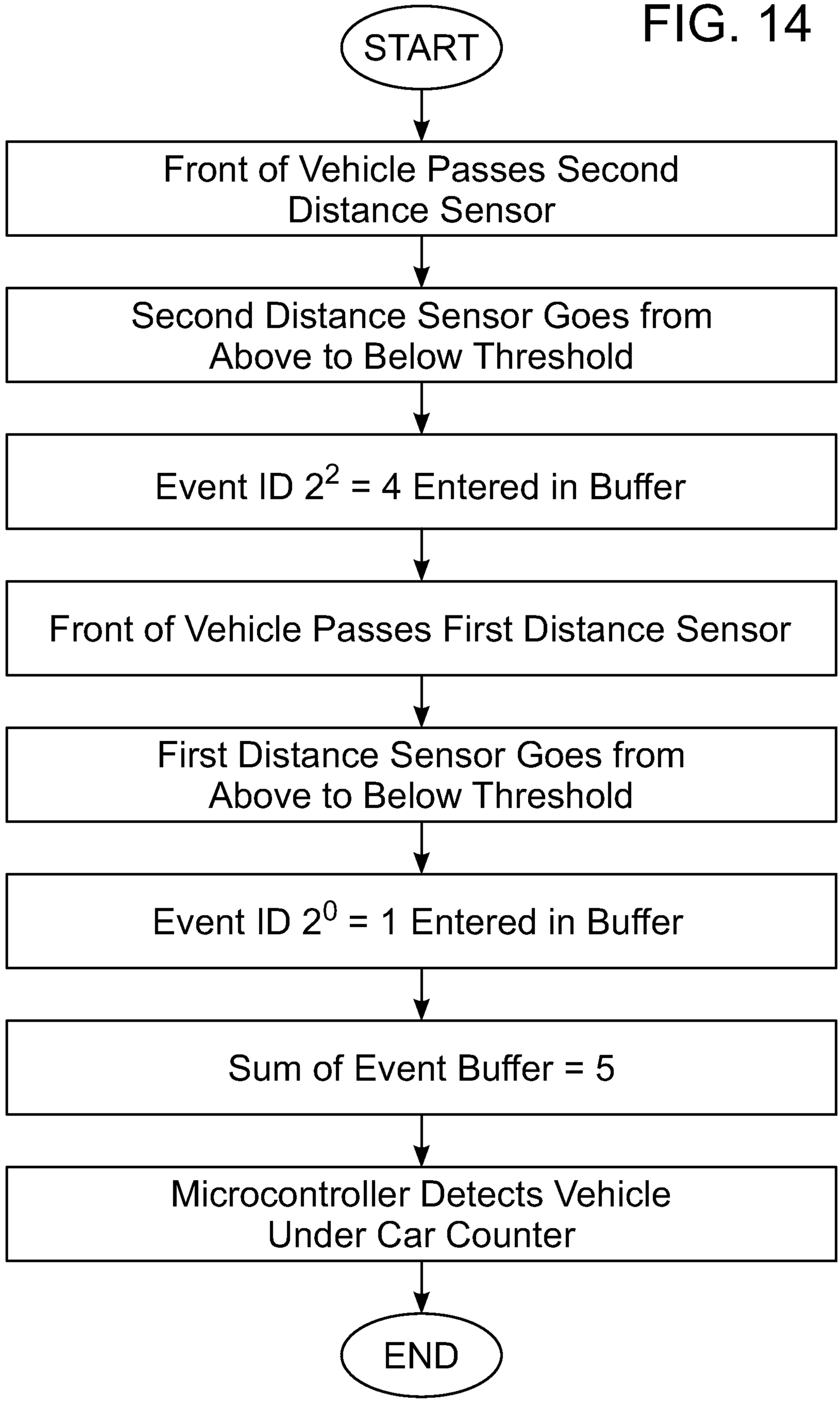
START
Front of Vehicle Passes Second Distance Sensor
Second Distance Sensor Goes from Above to Below Threshold
Event ID 2^2 = 4 Entered in Buffer
Front of Vehicle Passes First Distance Sensor
First Distance Sensor Goes from Above to Below Threshold
Event ID 2^0 = 1 Entered in Buffer
Sum of Event Buffer = 5
Microcontroller Detects Vehicle Under Car Counter
END

FIG. 15

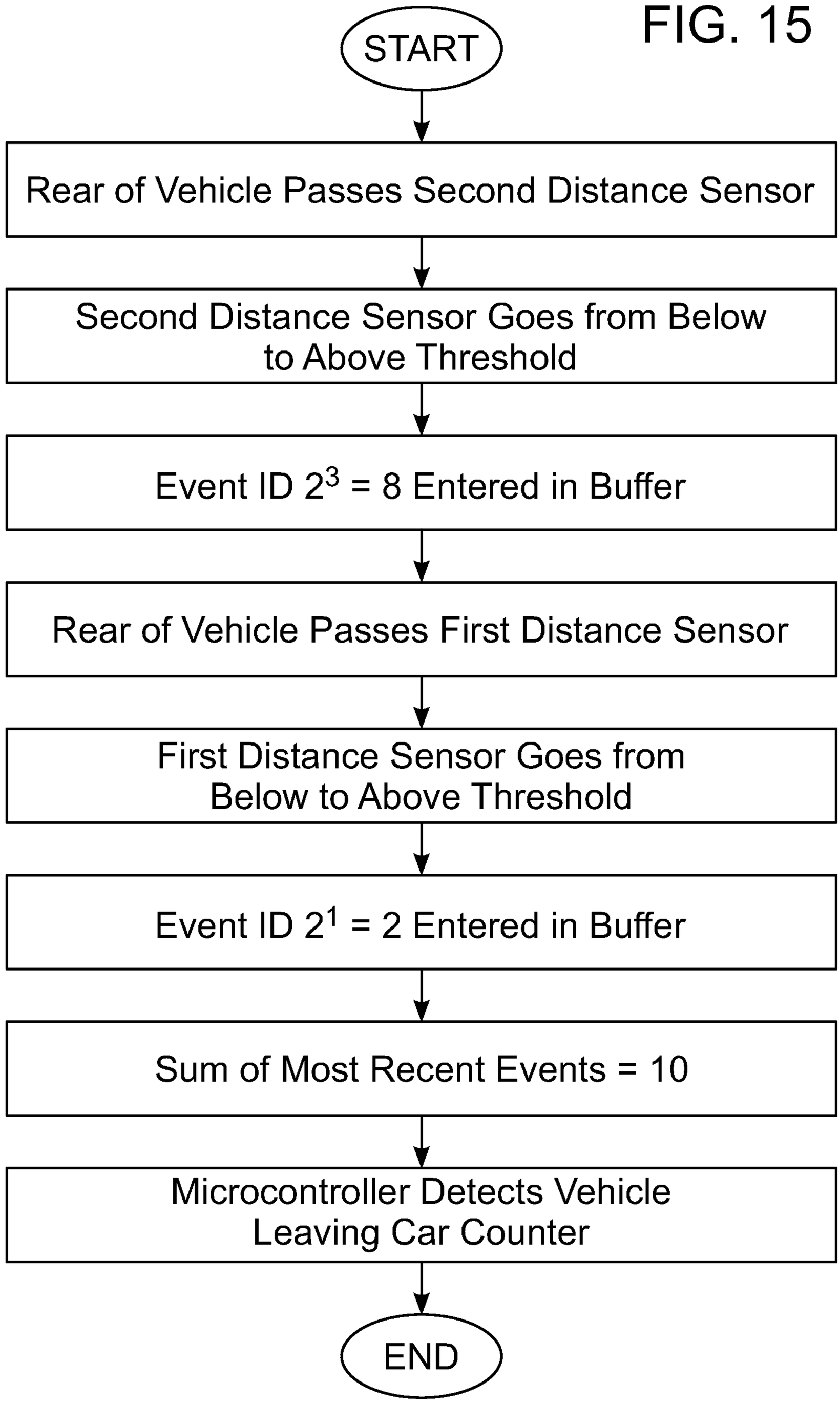
START
Rear of Vehicle Passes Second Distance Sensor
Second Distance Sensor Goes from Below to Above Threshold
Event ID 2^3 = 8 Entered in Buffer
Rear of Vehicle Passes First Distance Sensor
First Distance Sensor Goes from Below to Above Threshold
Event ID 2^1 = 2 Entered in Buffer
Sum of Most Recent Events = 10
Microcontroller Detects Vehicle Leaving Car Counter
END

FIG. 16

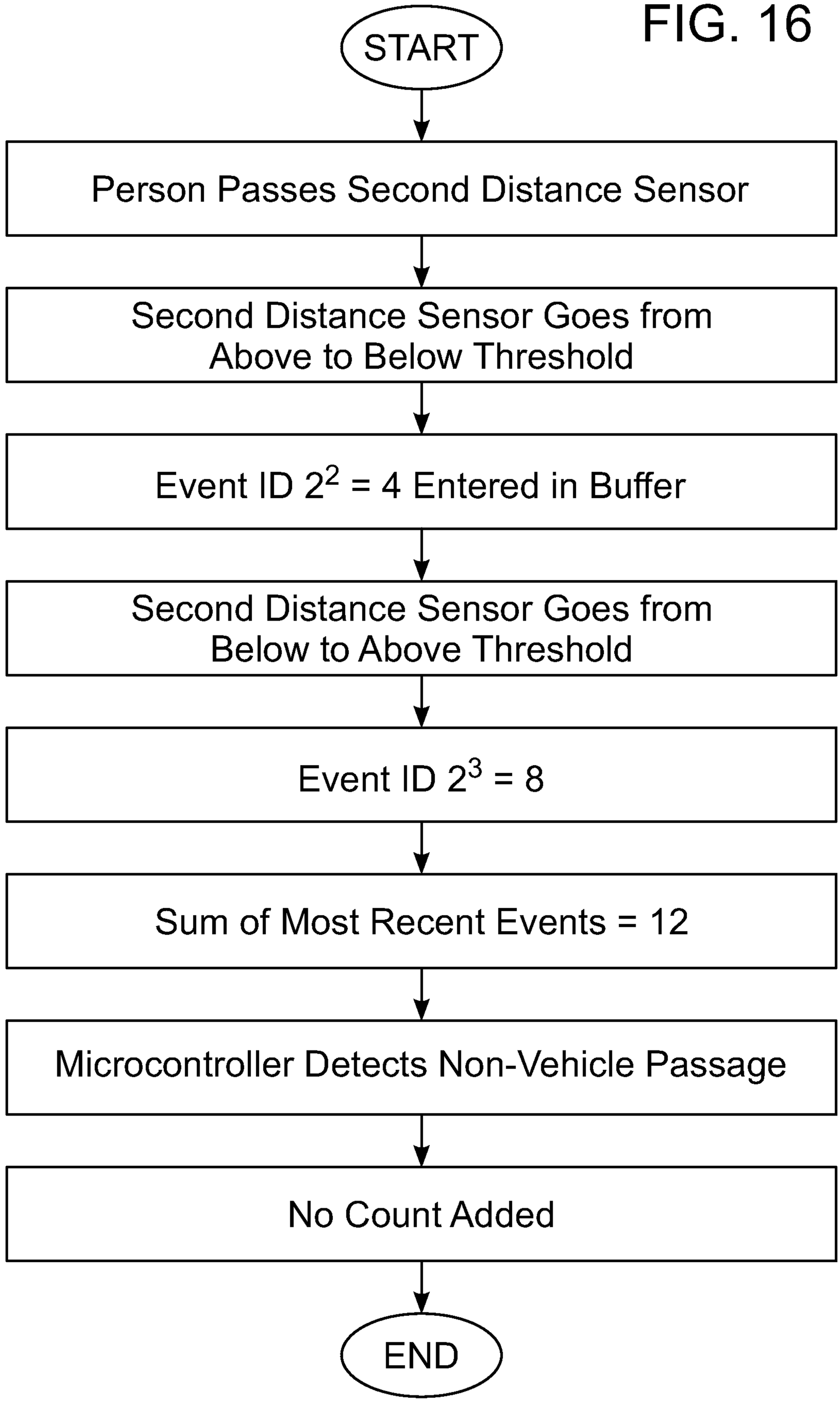
START
Person Passes Second Distance Sensor
Second Distance Sensor Goes from Above to Below Threshold
Event ID 2^2 = 4 Entered in Buffer
Second Distance Sensor Goes from Below to Above Threshold
Event ID 2^3 = 8
Sum of Most Recent Events = 12
Microcontroller Detects Non-Vehicle Passage
No Count Added
END

FIG. 17

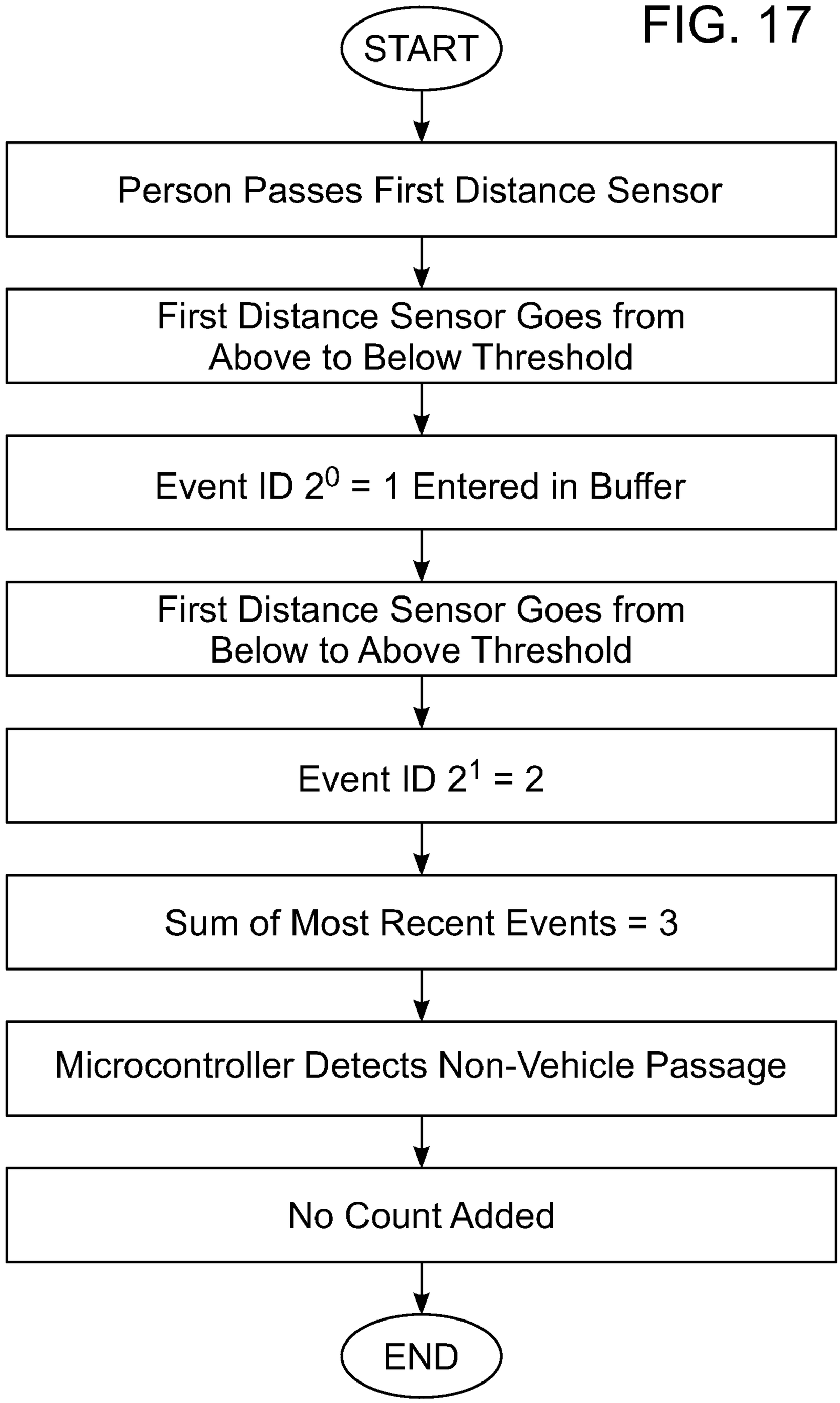
START
Person Passes First Distance Sensor
First Distance Sensor Goes from Above to Below Threshold
Event ID 2^0 = 1 Entered in Buffer
First Distance Sensor Goes from Below to Above Threshold
Event ID 2^1 = 2
Sum of Most Recent Events = 3
Microcontroller Detects Non-Vehicle Passage
No Count Added
END

FIG. 18

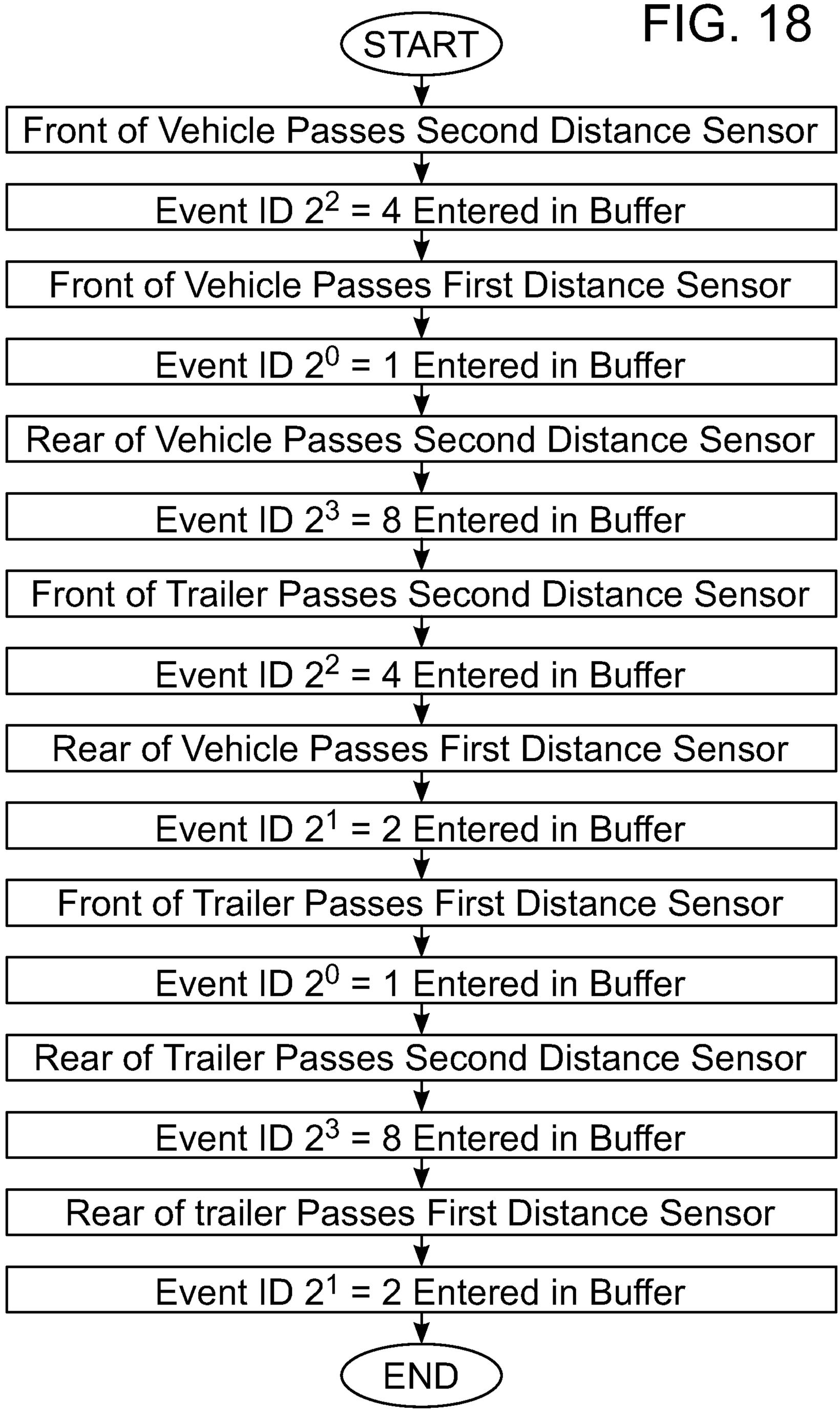
START
Front of Vehicle Passes Second Distance Sensor
Event ID 2^2 = 4 Entered in Buffer
Front of Vehicle Passes First Distance Sensor
Event ID 2^0 = 1 Entered in Buffer
Rear of Vehicle Passes Second Distance Sensor
Event ID 2^3 = 8 Entered in Buffer
Front of Trailer Passes Second Distance Sensor
Event ID 2^2 = 4 Entered in Buffer
Rear of Vehicle Passes First Distance Sensor
Event ID 2^1 = 2 Entered in Buffer
Front of Trailer Passes First Distance Sensor
Event ID 2^0 = 1 Entered in Buffer
Rear of Trailer Passes Second Distance Sensor
Event ID 2^3 = 8 Entered in Buffer
Rear of trailer Passes First Distance Sensor
Event ID 2^1 = 2 Entered in Buffer
END

FIG. 19

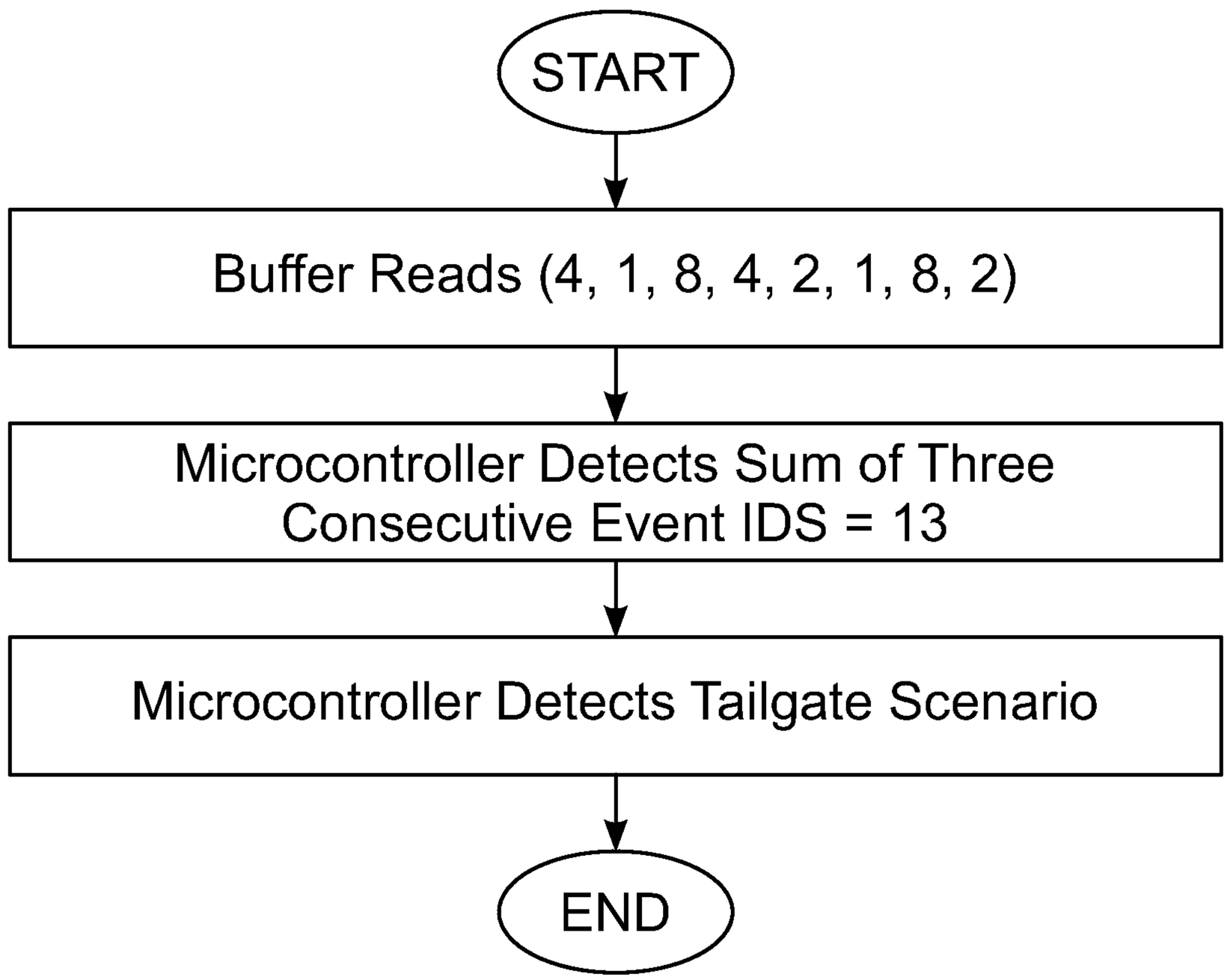
START
Buffer Reads (4, 1, 8, 4, 2, 1, 8, 2)
Microcontroller Detects Sum of Three Consecutive Event IDS = 13
Microcontroller Detects Tailgate Scenario
END

VEHICLE FLOW MONITORING SYSTEM

CROSS REFERENCE TO RELATED APPLICATIONS

[0001] The present application is a continuation of U.S. application Ser. No. 16/750,244 filed on Jan. 23, 2020 which issues as U.S. Pat. No. 11,151,874 on Oct. 19, 2021 (Docket No. FROG-014). Each of the aforementioned patent applications is herein incorporated by reference in their entirety.

STATEMENT REGARDING FEDERALLY SPONSORED RESEARCH OR DEVELOPMENT

[0002] Not applicable to this application.

BACKGROUND

Field

[0003] Example embodiments in general relate to a vehicle flow monitoring system for detecting both a car count and direction of movement of vehicles passing a point of interest.

Related Art

[0004] Any discussion of the related art throughout the specification should in no way be considered as an admission that such related art is widely known or forms part of common general knowledge in the field.

[0005] Detecting and counting a vehicle as it passes a point for the purposes of determining parking lot usage, statistics or analysis has been around for some time, with traditional means of detection including 'road tubes', infrared, magnetometer, image processing and inductive loops. 'Road tubes' are tubes installed on the road surface that trigger a change in pressure when an axle travels over the tube, which is then detected and counted. However, it only detects axles and therefore is difficult to distinguish between tail gating vehicles and trucks and similar such circumstances.

[0006] Inductive loops are impractical to install and are unreliable. They are often used for entry and exit points on parking lots and due to their unreliability, quickly lead to cumulative errors. Also, to determine the direction of a vehicle, two loops are required—doubling the impractical issues of installation.

[0007] Image processing is complicated and therefore prone to errors. Although the image sensor does not require mounting on the road surface, increasing the reliability, it is highly susceptible to difficult to control environmental conditions such as lighting.

[0008] Magnetometer based vehicle detection sensors typically measure disruptions in the earth's magnetic field caused by the presence of a vehicle. This disruption is small and unpredictable, as well as being temperature dependent—for these reasons, magnetometer based sensors have never achieved a high level of detection accuracy. These are also typically mounted on the road surface, which creates reliability issues due to the harsh environment.

[0009] Infra-red sensors rely heavily upon a clear or translucent window through an enclosure. This enclosure window is easily prone to damage rendering the sensor useless. When the window is blocked, either deliberately by misguided youths for example, or through environmental effects such as snow, the detection does not work. Furthermore, infrared sensors typically only have a binary output of present or not, limiting their practical use in algorithms.

SUMMARY

[0010] An example embodiment is directed to a vehicle flow monitoring system. The vehicle flow monitoring system includes a car counter which may include a microcontroller and a pair of distance sensors. Each of the distance sensors is oriented toward a unique point of interest. Each of the distance sensors includes a threshold distance reading which is used to detect whether a vehicle has passed underneath the car counter. The system may determine direction of travel of the vehicle based on which of the distance sensors is passed by the vehicle first. The microcontroller may assign an Event ID to each time a vehicle passes each of the sensors, with the Event ID being used to identify when and if the vehicle should be counted, or whether a non-vehicle object has passed the car counter.

[0011] There has thus been outlined, rather broadly, some of the embodiments of the vehicle flow monitoring system in order that the detailed description thereof may be better understood, and in order that the present contribution to the art may be better appreciated. There are additional embodiments of the vehicle flow monitoring system that will be described hereinafter and that will form the subject matter of the claims appended hereto. In this respect, before explaining at least one embodiment of the vehicle flow monitoring system in detail, it is to be understood that the vehicle flow monitoring system is not limited in its application to the details of construction or to the arrangements of the components set forth in the following description or illustrated in the drawings. The vehicle flow monitoring system is capable of other embodiments and of being practiced and carried out in various ways. Also, it is to be understood that the phraseology and terminology employed herein are for the purpose of the description and should not be regarded as limiting.

BRIEF DESCRIPTION OF THE DRAWINGS

[0012] Example embodiments will become more fully understood from the detailed description given herein below and the accompanying drawings, wherein like elements are represented by like reference characters, which are given by way of illustration only and thus are not limitative of the example embodiments herein.

[0013] FIG. **1**A is a side view of a vehicle flow monitoring system having one unobstructed distance sensor in accordance with an example embodiment.

[0014] FIG. **1**B is a side view of a vehicle flow monitoring system having a vehicle passing underneath a distance sensor in accordance with an example embodiment.

[0015] FIG. **2** is a perspective view of a vehicle flow monitoring system in accordance with an example embodiment.

[0016] FIG. **3**A is a side view of a vehicle flow monitoring system having two unobstructed distances sensors in accordance with an example embodiment.

[0017] FIG. **3**B is a side view of a vehicle flow monitoring system having a vehicle passing underneath a pair of distance sensors in accordance with an example embodiment.

[0018] FIG. **4** is a perspective view of a vehicle flow monitoring system in accordance with an example embodiment.

[0019] FIG. **5**A is a side view of a vehicle flow monitoring system having a pair of diagonally-oriented distance sensors in accordance with an example embodiment.

[0020] FIG. **5**B is a side view of a vehicle passing underneath a pair of diagonally-oriented distance sensors of a vehicle flow monitoring system in accordance with an example embodiment.

[0021] FIG. **6** is a perspective view of a vehicle flow monitoring system in accordance with an example embodiment.

[0022] FIG. **7** is a top view of a vehicle flow monitoring system in use to monitor two lanes of traffic in accordance with an example embodiment.

[0023] FIG. **8** is a perspective view of a vehicle flow monitoring system in accordance with an example embodiment.

[0024] FIG. **9** is a side view of a vehicle flow monitoring system in use in accordance with an example embodiment.

[0025] FIG. **10** is a perspective view of a vehicle flow monitoring system in accordance with an example embodiment.

[0026] FIG. **11** is a graph illustrating various Event ID's of a vehicle flow monitoring system in accordance with an example embodiment.

[0027] FIG. **12** is a block diagram of a vehicle flow monitoring system in accordance with an example embodiment.

[0028] FIG. **13** is a flowchart illustrating operation of a vehicle flow monitoring system in accordance with an example embodiment.

[0029] FIG. **14** is a flowchart illustrating detection of a vehicle underneath a car counter of a vehicle flow monitoring system in accordance with an example embodiment.

[0030] FIG. **15** is a flowchart illustrating passage of a vehicle past a car counter of a vehicle flow monitoring system in accordance with an example embodiment.

[0031] FIG. **16** is a flowchart illustrating passage of a person past a second distance sensor of a vehicle flow monitoring system in accordance with an example embodiment.

[0032] FIG. **17** is a flowchart illustrating passage of a person past a first distance sensor of a vehicle flow monitoring system in accordance with an example embodiment.

[0033] FIG. **18** is a flowchart illustrating passage of a vehicle and trailer past a car counter of a vehicle flow monitoring system in accordance with an example embodiment.

[0034] FIG. **19** is a flowchart illustrating detection of a tailgate or trailer scenario of a vehicle flow monitoring system in accordance with an example embodiment.

DETAILED DESCRIPTION

A. Overview.

[0035] An example vehicle flow monitoring system generally comprises a car counter **20** which is adapted to detect passage of a vehicle **12**, wherein the car counter **20** comprises a first distance sensor **21** and a second distance sensor **22**. The first distance sensor **21** may be oriented towards a first point of interest and the second distance sensor **22** may be oriented towards a second point of interest. The first distance sensor **21** is adapted to detect each of the vehicles **12** passing the first distance sensor **21**. The second distance sensor **22** is adapted to detect each of the vehicles passing the second distance sensor **22**. The first point of interest is distally-spaced with respect to the second point of interest.

[0036] A microcontroller **24** is communicatively interconnected with the car counter **20**, wherein the microcontroller **24** is communicatively interconnected with a database **31**, wherein the database includes a first threshold value for the first distance sensor **21** and a second threshold value for the second distance sensor **22**, wherein the microcontroller **24** is adapted to detect when a first distance reading detected by the first distance sensor **21** s greater than or less than the first threshold value, wherein the microcontroller is adapted to detect when a second distance reading detected by the second distance sensor **22** is greater or less than the second threshold value; wherein the microcontroller **24** is adapted to count each vehicle **12** passing the car counter **20**.

[0037] The microcontroller **24** may be adapted to detect direction of movement of the vehicle **12** based on which of the first distance sensor **21** or the second distance sensor **22** is passed by the vehicle **12** first. The first distance sensor **21** and the second distance sensor **22** may each be comprised of a LIDAR sensor. The first threshold value may be configured to be beyond a noise level of an unobstructed distance reading of the first distance sensor **21**. The second threshold value may be configured to be beyond a noise level of an unobstructed distance reading of the second distance sensor **22**.

[0038] The car counter **20** may be positioned above the first and second points of interest. The distance between the points of interest may be shorter than a length of the vehicle **12**. The first distance sensor **21** may be distally-spaced with respect to the second distance sensor **22**, wherein both the first distance sensor **21** and the second distance sensor **22** are vertically-oriented. Alternatively, the first distance sensor **21** may be adjacent to the second distance sensor **22**, wherein both the first distance sensor **21** and the second distances sensor **22** are both diagonally-oriented towards their respective points of interest.

[0039] The first and second distance sensors **21**, **22** may be adapted to take distance measurements at the same time. The first threshold value of the first distance sensor **21** may be calibrated based on noise readings from the first distance sensor **21** and the second threshold value of the second distance sensor **22** may be calibrated based on noise readings from the second distance sensor **22**.

[0040] The microcontroller **24** may be directly connected to both of the distance sensors **21**, **22**. The microcontroller **24** may be adapted to classify transitions from unobstructed measurements to obstructed measurements by each of the first distance sensor **21** and the second distance sensor **22** as an event. The microcontroller **24** may be adapted to assign an Event ID to each of the events detected by the distance sensors **21**, **22**. The microcontroller **24** may be adapted to recognize when a non-vehicle object has passed the first distance sensor **21** or the second distance sensor **22** such that the non-vehicle object is not counted. The microcontroller **24** may also be adapted to identify when the vehicle has a trailer based on a sequence of Event ID's. The microcontroller **24** may be adapted to reset the distance sensors **21**, **22** after a period of time has passed.

[0041] In an example embodiment, the car counter **20** may comprise a third distance sensor **28** and a fourth distance sensor **29**, wherein the first and second distance sensors **21**,

22 monitor a first lane of traffic and wherein the third and fourth distance sensors **28**, **29** monitor a second lane of traffic.

B. Car Counters.

[0042] As shown throughout the figures, the vehicle flow monitoring system **10** may include car counters **20** for monitoring the flow of vehicles past a desired location. By way of example, the desired location could be an entrance or exit to a parking garage, which will allow monitoring of the number of available parking spaces. As another non-limiting example, the desired location could be a roadway on which it is desired to analyze traffic patterns, such as is typical when analyzing whether a roadway needs to be improved to accommodate different traffic patterns.

[0043] The figures illustrate a number of exemplary embodiments of car counters **20** for use with the vehicle flow monitoring system **10**. It should be appreciated that the illustration and description of such exemplary embodiments is for exemplary purposes only, and thus should not be construed as limiting in scope. For example, the number, positioning, and orientation of any distance sensors **21**, **22**, **27**, **28** may vary in different embodiments.

[0044] In the exemplary embodiment shown in FIGS. **1**A, **1**B, and **2**, only a first distance sensor **21** is utilized. As shown in FIG. **1**A, the first distance sensor **21** may be positioned above the point of interest to be monitored for vehicle flow. For example, in a parking garage, the distance sensor **21** may be secured to the ceiling of the parking garage. As another example, on an uncovered roadway, the distance sensor **21** could be suspended or otherwise secured above the roadway, such as by a support such as a pole as is commonly used for lighting on roadways. As yet another example, the distance sensor **21** could be secured to the same framework as traffic lights.

[0045] As shown in FIG. **1**A, the distance sensor **21** continuously takes a distance reading between the distance sensor **21** and a point underneath the distance sensor **21**. When no vehicle **12** is underneath the distance sensor **21**, the distance sensor **21** will detect the distance to the roadway such as shown in FIG. **1**A.

[0046] When a vehicle **12** is underneath the distance sensor **21**, the distance sensor **21** will detect the distance to the vehicle such as shown in FIG. **1**B. In this manner, the distance sensor **21** can determine whether a vehicle **12** is passing underneath the distance sensor **21**, as the distance between the distance sensor **21** and the roadway will be greater than the distance between the distance sensor **21** and the vehicle **12** when the vehicle is passing underneath.

[0047] FIG. **2** illustrates usage of a car counter **20** comprised of a single distance sensor **21** in use in a parking garage **14**. As can be seen, a single distance sensor **21** has been positioned over a lane of the parking garage **14**. The positioning of the distance sensor **21** may vary in different embodiments. For example, the distance sensor **21** could be positioned on an entry lane of the parking garage **14** so as to count the number of vehicles **12** entering the parking garage **14**. A separate distance sensor **21** could be positioned on an exit lane of the parking garage **14** so as to count the number of vehicles **12** exiting the parking garage **14**. In this manner, the number of vehicles **12** within the parking garage **14** can be monitored.

[0048] As the vehicle **12** is moving within the lane being monitored by the car counter **20**, the timing of the distance sensor **21** will dictate if the sensor **21** detects a "hit" on a vehicle **12** passing underneath the sensor **21**. Therefore, the sampling rate of the distance sensor **21** will affect readings. For example, the more frequently readings are taken, the more likely a vehicle **12** passing underneath the distance sensor **21** will result in a shorter distance detected by the distance sensor **21**.

[0049] By way of example and without limitation, an exemplary embodiment may utilize distance samples taken at 50 times per second (50 Hertz). However, the sampling rate for distance measurements could vary within any range capable of being processed by a requisite processing device, such as a microcontroller **24** as discussed herein. The sampling rate of the distance sensor **21** could be adjusted to suit various implementations. For example, in areas with slower traffic (such as within a parking garage), a sampling rate of 20 Hz may be suitable. In areas with faster traffic (such as over a roadway), a sampling rate of 100 Hz may be more desirable to ensure accurate readings.

[0050] FIGS. **1**A, **1**B, and **2** illustrate an exemplary position of the first distance sensor **21** over the point of interest. However, it should be appreciated that the positioning of the first distance sensor **21** may vary in different embodiments. The systems and methods described herein are flexible with respect to the mounting position of the distance sensor **21**, and any configuration can be supported so long as a vehicle **12** in the path of the distance sensor **21** yields a different reading than when a vehicle **12** is not present. By way of example and without limitation, in some embodiments the distance sensor **21** may be positioned horizontally across the path of the vehicle **12**, vertically underneath the vehicle such as on the road surface, or any angle therebetween.

[0051] While use of a car counter **20** comprising a single distance sensor **21** provides some car counting functionality, it should be understood that a single distance sensor **21** is not operable to determine the direction of travel of the vehicle **12**. In situations in which direction of movement is to be detected, it would be beneficial to add a second distance sensor **22** such that readings from both distance sensors **21**, **22** may be utilized to determine the direction of travel of the vehicle **12**.

[0052] For example, it may be desirable to only count vehicle's **12** going in a certain direction. With the use of a second distance sensor **22** as discussed below, vehicles **12** travelling in an opposite direction can be excluded from the count. The use of a second distance sensor **22** may also reduce errors introduced from random events such as pedestrians passing by the distance sensor **21** in one-sensor embodiments.

[0053] FIGS. **3**A, **3**B, and **4** illustrate a first exemplary embodiment of a car counter **20** utilizing a pair of distance sensors **21**, **22**. In such an exemplary embodiment, it can be seen that a microcontroller **24** may be positioned between the distance sensors **21**. It should be appreciated that the use of a hard-wired microcontroller **24** is optional. For example, in some embodiments, the distance sensors **21**, **22** may be wirelessly connected to the microcontroller **24**, such as through a communications protocol such as Bluetooth. In such wireless embodiments, the microcontroller **24** may be positioned remotely with respect to the distance sensors **21**, **22**. For example, in the case of a parking garage, a single microcontroller **24** could be positioned in a housing and adapted to remotely communicate with any sensors **21**, **22** in the parking garage.

[0054] The exemplary embodiment of FIGS. **3**A, **3**B, and **4** illustrates a microcontroller **24** which is positioned on the overheard ceiling of a parking garage adjacent to the pair of distance sensors **21**, **22**. While the figure illustrates that the microcontroller **24** is centrally-located between the distance sensors **21**, **22**, it should be appreciated that such positioning of the microcontroller **24** is merely for illustrative purposes, as the microcontroller **24** may be positioned at various locations with respect to the distance sensors **21**, **22** including, in some embodiments, remotely.

[0055] By use of two sensors **21**, **22** such as shown in FIGS. **3**A, **3**B, and **4**, the direction of travel of the vehicle **12** may be determined by the car counter **20**. With this type of arrangement, the first distance sensor **21** may detect a shorter distance than the second distance sensor **22** as the car passes underneath. This enables the detection of the direction of the vehicle.

[0056] As a vehicle **12** passes underneath the car counter **20**, it is desirable that neither of the distance sensors **21**, **22** read the maximum distance reading to the point of interest such as the road surface while a vehicle **12** is passing the point of interest. In this manner, false positives can be avoided. Thus, the spacing of the distance sensors **21**, **22** with respect to each other should be limited to less than the expected length of the longest vehicle **12** expected to pass under the car counter **20**.

[0057] This distance may vary depending on the location of the car counter **20**. For example, in a parking garage with limited clearance, it is extremely unlikely that a large semi-truck would be passing under the car counter **20**. In such an embodiment, the distance between the distance sensors **21**, **22** may be minimized since a longer vehicle **12** is not expected. By contrast, a car counter **20** positioned over a freeway will necessarily need to have the distance sensors **21**, **22** spaced appropriately for longer vehicles such as semi-trucks.

[0058] The pair of distance sensors **21**, **22** may be centrally-located above the point of interest such as shown in the figures, with each of the distance sensors **21**, **22** being equidistance from the point of interest. For example, if the first distance sensor **21** is two meters away from the point of interest in a first horizontal direction, the second distance sensor **22** may be two meters from the point of interest in a second horizontal direction. These sample distances are merely exemplary and should not be construed as limiting in scope, as the spacing between the distance sensors **21**, **22** will be determined based on the expected length of the vehicles **12** being monitored.

[0059] The sampling of distance readings from the distance sensors **21**, **22** also need to be timed properly to ensure accurate readings. In a preferred embodiment, each of the pair of distance sensors **21**, **22** samples distance readings within the same time window, such as at the same point in time. However, due to constraints in processing power, available sensors **21**, **22**, and communications protocols, the measurements taken by each of the distance sensors **21**, **22** may be slightly separated in time. However, the readings will still be accurate so long as the readings are as far apart in time as the time it would take for the vehicle **12** to travel the distance from the first distance sensor **21** to the second distance sensor **22**.

[0060] The manner in which the two-sensor car counter **20** operates to both count cars and determine direction of travel may vary in different embodiments. In a simplified methodology, a vehicle **12** will be counted each time that both distance sensors **21**, **22** detect a distance less than that to the point of interest (the road surface). When both distance sensors **21**, **22** revert to detecting the distance to the point of interest, the car count for that vehicle **12** will be completed and the system will be reset awaiting another vehicle **12**. If only a single distance sensor **21** is triggered at a time, it can be often assumed that it was not a vehicle **12** that passed underneath the distance sensors **21**, **22**. If both distance sensors **21**, **22** are triggered, it can be assumed that a vehicle **12** passed underneath the distance sensor **21**, **22**.

[0061] The first distance sensor **21**, **22** to trigger will indicate the direction of travel of the vehicle **12**. For example, if the first distance sensor **21**, **22** triggers first, the vehicle **12** is moving in the direction of the first distance sensor **21**. If the second distance sensor **21**, **22** triggers first, the vehicle **12** is moving in the direction of the second distance sensor **22**. In this manner, the direction of movement of the vehicle **12** may be determined through the usage of the two distance sensors **21**, **22**.

[0062] In the exemplary embodiment shown in FIGS. **1**-**4**, it can be seen that each illustrated distance sensor **21**, **22** is oriented vertically to point down toward the road surface, forming a right angle with the ceiling or other surface to which the distance sensor **21**, **22** is secured. In an alternate embodiment as shown in FIGS. **5**A, **5**B, and **6**, it can be seen that the distance sensors **21**, **22** are instead angularly-oriented in a diagonal orientation. Such an embodiment may be utilized to save space as the two distance sensors **21**, **22** may be positioned directly adjacent to each other. In such an embodiment, the microcontroller **24** may be positioned above the distance sensors **24** with a wired connection or remotely with a wireless connection.

[0063] FIGS. **7** and **8** illustrate an embodiment of a car counter **20** in which four distance sensors **21**, **22**, **28**, **29** are utilized. In such an embodiment, a first pair of distance sensors **21**, **22** comprised of a first distance sensor **21** and a second distance sensor **22** may be positioned over a first lane on the first side of a lane divider **18** and a second pair of distance sensors **28**, **29** comprised of a third distance sensor **28** and a fourth distance sensor **29** may be positioned over a second lane on the second side of a lane divider **18**.

[0064] In this manner, two adjacent lanes of traffic may be simultaneously monitored, with the first lane of traffic being monitored by the first pair of distance sensors **21**, **22** and the second lane of traffic being monitored by the second pair of distance sensors **28**, **29**. The distance sensors **21**, **22**, **28**, **29** may be positioned adjacent to each other and oriented diagonally such as shown in the figures to form an X-pattern. In other embodiments, a microcontroller **24** may be centrally-located with each other the distance sensors **21**, **22**, **28**, **29** being connected to the microcontroller **24**. The distance sensors **21**, **22**, **28**, **29** may also be vertically-oriented in such an embodiment though not shown in the figures.

[0065] In some embodiments, it may be possible to detect direction of travel with use of a single distance sensor **21**, provided that the single distance sensor **21** could be positioned to take readings where desired. In other words, the distance sensor **21** may be movable along a surface, such as through the use of rails, tracks, or the like. So long as the distance sensor **21** is configured to move at an appropriate speed, it could perform the function of a pair of sensors **21**, **22** by moving with the vehicle **12**. It should also be appreciated that, in situations with long vehicles being

expected, additional sensors **21**, **22**, **28**, **29** could be utilized for each lane. For example, rather than the use of two sensors **21**, **22** per lane, an embodiment with longer vehicles expected could use three, four, five, or more sensors **21**, **22**, **28**, **29** per lane.

[0066] It should be appreciated that a wide range of different types of distance sensors **21**, **22**, **28**, **29** may be utilized in different embodiments. By way of example and without limitation, the distance sensors **21**, **22**, **28**, **29** could rely on a wide range of signals, including but not limited to laser, infrared LED, sonic waves, and the like. As such, it should be appreciated that both light-based (visual) and sound-based (sonic) sensors may be utilized for different embodiments.

[0067] In a preferred embodiment as shown in FIG. **9**, the preferred distance sensor **21**, **22**, **28**, **29** used for providing distance readings in the car counter **20** is a LIDAR (light detection and ranging) sensor. A LIDAR sensor is typically an integrated instrument that fires rapid pulses of laser light in the oriented direction and then detects any of the pulses that are reflected back to the LIDAR sensor. The time of flight for the reflected pulses is recorded. The distance to the reflecting object (in most cases, a road surface) can then be determined, such as by the microcontroller **24**. The microcontroller **24** may be integrated or interfaced with the LIDAR sensor(s). Although LIDAR sensors are preferred for traffic monitoring, it should be appreciated that other types of sensors or distance measuring methods may be utilized.

C. Vehicle Monitoring Algorithm.

[0068] A car counting algorithm is utilized to process the distance measurements from the distance sensors **21**, **22**, **28**, **29** so as to determine vehicle **12** count and direction of travel. The distance sensors **21**, **22**, **28**, **29** are first calibrated. After calibration, analysis and readings may be performed.

[0069] During the calibration phase, the car counter **20** is calibrated for its specific installation. For example, different locations will necessarily have a different distance between the distance sensors **21**, **22**, **28**, **29** and the point of interest such as a road or ground surface. Calibration is utilized to fine-tune each sensor **21**, **22**, **28**, **29** to its specific location and orientation.

[0070] Calibration is used to determine what should be considered an "unobstructed" distance reading and what types of readings should be considered to trigger a car count. For example, two values for use in a simple calibration would be (1) the distance to the point of interest when unobstructed and (2) a minimum distance to be considered sufficient to trigger a car count.

[0071] Mounting heights, locations, and angles of orientation of the distance sensors **21**, **22**, **28**, **29** may vary depending on the surroundings. Further, not all vehicles have an identical profile and height. In fact, any system should accommodate for a wide range of vehicle **12** types. One method of calibration utilizes manual entry of data for a fixed calibration. In such a fixed calibration, the physical unobstructed distance from each distance sensor **21**, **22**, **28**, **29** to the point of interest (generally a ground surface) may be manually measured and entered into the system.

[0072] However, such a fixed calibration may suffer from shortcomings, such as false readings due to different vehicle **12** types. Thus, it is beneficial to utilize a dynamic calibration algorithm that dynamically calculates a distance that is considered the threshold of unobstructed or obstructed readings. Further, as each distance sensor **21**, **22**, **28**, **29** used to monitor a single point of interest may be installed with different geometry, it is important that the calibration (whether fixed or dynamic) be performed for each of the distance sensors **21**, **22**, **28**, **29** of any particular car counter **20**.

[0073] During normal operation, the measured unobstructed distance from a distance sensor **21** will remain substantially constant with any variations being attributable to small errors in the distance measurement. If the distance measurement is obstructed for one reason or another, this may result in a larger variation over a data set. Using these principles, calibration may be set. Taking data over a set time window (such as 30 seconds, but in some embodiments may be more or less), if the variation of data is measured and considered acceptable, the distance data can be averaged and the result considered to be the unobstructed distance for that distance sensor **21**. A threshold distance for an obstruction can then be set as an offset from the calculated unobstructed distance average, with the threshold being set beyond the bounds of the variation in readings to eliminate noise.

[0074] Given the dynamic nature of various locations in which the car counter **20** may be set, it is often desirable to use a dynamic calibration. In such an embodiment, the calibration is repeated continuously during operation. For example, each set time window (period) with acceptable variation is used to calculate a new average and offset. There will often be stretches of time (off-peak hours) where there are no obstructions, such as when no vehicles **12** are passing under the car counter **20**. The dynamic calibration accounts for such unobstructed periods of time.

[0075] With the car counter **20** being calibrated to correlate distance sensor **21** readings, including unobstructed distance measurements and offset thresholds beyond which are to be considered a vehicle, an algorithm may be utilized to detect if a vehicle **12** has passed the point of interest. The systems and methods described herein may use the assignment of numbers to each event, with each event representing that the threshold has been crossed for a given distance sensor **21**, **22**, **28**, **29** of the car counter **20**.

[0076] The summing of these events in comparison to known pattern sums combined with some state tracking can then be made for the determination of whether an object should be counted. The numbers may be assigned such that the summing of numbers will always be unique. By way of example and without limitation, one such method for ensuring unique numbers is use of Binary (base **2**) format for assigned event numbers.

[0077] With reference to FIG. **9**, an exemplary car counter **20** is shown which is comprised of a first distance sensor **21**, a second distance sensor **22**, and a microcontroller **24**. The distance sensors **21**, **22** are illustrated as comprising LIDAR sensors, though other types of sensors may be utilized as discussed previously.

[0078] In such an embodiment, the microcontroller **24** will utilize four events to determine if a vehicle has passed. If these events are numbered with an index starting at zero, then using Base **2** format with the index number as the personal notation (bit position) in binary format, the event numbers will be $2^0=1$, $2^1=2$, $2^2=4$, $2^3=8$. The events of significance are thus split up as follows.

[0079] Event ID 2^0=1 represents the first distance sensor **21** going from above threshold to below threshold (first distance sensor **21** down).

[0080] Event ID 2^1=2 represents the first distance sensor **21** going from below threshold to above threshold (first distance sensor **21** up).

[0081] Event ID 2^2=4 represents the second distance sensor **22** going from above threshold to below threshold (second distance sensor **22** up).

[0082] Event ID 2^3=8 represents the second distance sensor **22** going from below threshold to above threshold (second distance sensor **22** up).

[0083] The event identification numbers are not, by themselves, sufficient to accurately determine if a vehicle **12** has passed the position of interest and the direction of travel. However, the combination of consecutive events does allow such determinations to be made. Thus, as events are continuously occurring, they are stored in a buffer for further analysis (such as by the microcontroller **24**).

[0084] Continuing to reference FIG. **9**, it can be seen that a vehicle **12** has passed the second distance sensor **22** but not yet reached the first distance sensor **21**. At this point in time, the second distance sensor's **22** readings have gone from above threshold to below threshold, resulting in the event carrying a value of 4, which is placed in the event buffer. Moments later when the vehicle **12** moves in the direction indicated to pass under the first distance sensor **21**, an event with the value of 1, representing the first distance sensor **21** going from above threshold to below threshold, will be triggered and stored in the buffer.

[0085] When two consecutive events sum up to equal 5, it can be considered that the vehicle is over the position of interest. This event value will work regardless of the direction of travel of the vehicle **12**. The vehicle **12** direction of travel may also be determined by examining which event occurred first. For reliability, it is prudent that the order of events occurring while the vehicle moves over the position of interest correspond to those of the vehicle leaving the point of interest.

[0086] At this point, there are two events in the buffer (4, 1) and the microcontroller **24** knows that they have summed to 5 and thus there is currently a vehicle over the position of interest. The microcontroller **24** can then anticipate that the next readings should correspond to the vehicle **12** leaving. The following two events added to the buffer would ideally then be 8 as the rear of the vehicle **12** moves out from underneath the second distance sensor **22**, followed by 2. The buffer thus holds the event values (4, 1, 8, 2) at this point. Two consecutive events summing to equal ten may thus indicate that a vehicle **12** has left the position of interest.

[0087] As described above, the use of event numbers assigned to various readings for each distance sensor **21**, **22**, **28**, **29** can be used to determine both (1) whether a vehicle **12** is underneath the car counter **20** and (2) the direction of travel of the vehicle **12**. While the above example used only a pair of distance sensors **21**, **22**, it should be appreciated that additional distance sensors **21**, **22** may also be accommodated in such a system to accommodate longer vehicles. Further, the values using Base **2** format is merely for exemplary purposes, and other number values may be utilized in different embodiments.

[0088] To prevent or limit errors, the microcontroller **24** will only consider a vehicle **12** leaving the point of interest if the vehicle **12** has been deemed to have arrived over the point of interest and the order of events for leaving correlates correctly with the vehicle **12** arriving. If so, a vehicle **12** count may be added or subtracted to/from the system as desired based on direction. FIG. **11** illustrates a graph showing the sequence of events just described above for a single vehicle **12** passing under the distance sensors **21**, **22**.

[0089] The car counter **20** is configured to prevent or minimize occurrences of false positives, such as due to a small obstruction passing under the car counter **20**. For example, in a parking garage, individuals will frequently pass under the car counter **20** while walking to or from their vehicles **12**. It is important that the car counter **20** not register such individuals as vehicles **12** so as to ensure an accurate count.

[0090] The algorithm discussed above prevents false positives due to small obstructions such as individuals passing underneath the car counter **20**. In such a situation, the first distance sensor **21** would go both up and down before any triggering of the second distance sensor **22**. If a person were to walk under the car counter **20**, the first distance sensor **21** would read event ID's as a 1 followed by a 2, resulting in a sum of 3 for the first distance sensor **21**. The second distance sensor **22** would read event ID's as a 4 followed by an 8, resulting in a sum of 12 for the second distance sensor **21**. Therefore, if the microcontroller **24** detects the sum of consecutive events as equalling 3 or 12, the microcontroller **24** will not consider the event to represent a vehicle **12** and it will not be counted.

[0091] The described algorithm may also be utilized to prevent false positives due to a pair of close vehicles **12** (e.g., one vehicle **12** tailgating another) or a vehicle **12** towing a trailer. In such a situation, it is possible that the second distance sensor **22** would trigger an event ID of 4 shortly after an event ID of 8, prior to the leading vehicle **12** passing completely from underneath the first distance sensor **21**. Such a situation may occur if a second vehicle **12** or a trailer was closer to the first vehicle **12** than the distance separating the distance sensors **21**, **22**. The second event ID of 4 would then be followed by an event ID of 1 as the tailing vehicle **12** or trailer passes under the first distance sensor **21**. Then, as the tailing vehicle moves forward, the second distance sensor **22** would trigger an event ID of 8 and then the first distance sensor **21** would trigger an event ID of 2 to provide a total event ID sequence of (4, 1, 8, 4, 2, 1, 8, 2).

[0092] The algorithm may accommodate for such situations by examining the sum of three consecutive event ID's in situations in which a vehicle **12** arrival has been detected previously. For example, such a situation may occur when two consecutive event ID's sum to 5. If a tailgating scenario is occurring, the sum of three consecutive event ID's will be equal to 13 or 7. In the above scenario, it can be seen that three consecutive event ID's sum to 7 (4, 2, 1) indicating a tailgating scenario.

[0093] The system may treat such tailgating scenarios differently depending on the situation. One possible treatment of such scenarios is for the system to count the capture of the tailgating scenario as an additional vehicle **12**. This approach may be desirable when counting vehicles **12** entering a parking garage **14** since a vehicle **12** towing a trailer or a tailgating vehicle **12** will occupy two parking spaces **15**. In another scenario, such as on a high-speed freeway, it would more likely that the vehicle **12** has a trailer rather than a tailgater due to the relative speed of vehicles **12** travelling. In such a situation, an additional count may not

be added. In either case, the event buffer is cleared up to the point of the original arrival after the appropriate event sequence has been detected and flagged. In an embodiment utilizing a pair of distance sensors **21**, **22**, the event buffer will always be removed of four events. After the algorithm has removed any such tailgating events, the system will reset to the same state as if a single vehicle **12** is passing. In other words, the system will be in a state that a vehicle **12** has arrived and awaiting departure with the corresponding exit pattern having event ID's summed to ten, representing event ID's of (8, 2) which represents the vehicle **12** passing. A single vehicle **12** will be counted.

[0094] The algorithm may also accommodate for variance and errors in readings. For example, a vehicle **12** moving at speed with an irregular shape may result in two consecutive matching sets of events occurring. For example, the event buffer would be (1, 2, 1, 2) or (8, 4, 8, 4). In such circumstances, the system will be configured to ignore duplicate sets of events. For example, if the system reads (1, 2, 1, 2), the system will ignore the duplicate set and instead output only (1, 2). Similarly, if the system reads (8, 4, 8, 4), the system will ignore the duplicate set and instead output only (8, 4). In this manner, such false positives can be accommodated for in real-time without affecting future events.

[0095] The system will generally reset or resolve an event buffer when both distance sensors **21**, **22** return readings above their detection threshold as there is no vehicle or obstruction under either of the sensors **21**, **22**. Any flags remaining in the buffer can also be cleared. Further, the system may be configured to remove events after a certain period of time has passed. FIG. **13** illustrates an exemplary flowchart showing operation of the algorithm with a car counter **20** including two distance sensors **21**, **22**.

D. Vehicle Flow Monitoring System.

[0096] The systems and methods described above may be incorporated into a larger vehicle flow monitoring system **10** configured to provide traffic and/or parking statistics and/or guidance based on the data received from the car counter(s) **20** and other devices described below.

[0097] FIG. **12** illustrates an exemplary vehicle flow monitoring system **10** which incorporates a central control unit **30**, a database **31**, car counters **20**, parking sensors **26**, a user interface **37**, vehicles **12**, dynamic signage **34**, mobile devices **35**, and guidance lights **36**. As shown in FIG. **12**, the car counters **20** communicate to a cloud-based central control unit **30** either directly or through a communications network such as a gateway.

[0098] The central control unit **30** may be a single computer system or may be multiple computer systems through distributed computing. The central control unit **30** may be comprised of a server computer or a standalone processing box. The central control unit **30** may include a database **31** or may be communicatively interconnected with a database **31**. The central control unit **30** may be interconnected with the car counters **20** and other devices via a wired connection or a wireless connection, such as Wi-Fi, RF, Bluetooth, or the like.

[0099] The central control unit **30** may either include or be communicatively interconnected with a database **31**. In either case, the associated database **31** may contain all relevant data for the vehicle flow monitoring system **10**. By way of example and without limitation, the database **31** may include data such as device locations, device counts, parking structure details, users, login information, historical car transitions, details of associated dynamic signage, operational parameters and the like along with the association of all data elements. The database **31** may be stored across multiple systems or may be stored on a single system.

[0100] The central control unit **30** may display a user interface **37** which may be used by operators of the vehicle flow monitoring system **10** to ensure that all elements of the system **10** are properly functioning. For example, the user interface **37** may indicate if one or more sensors **21**, **22**, **26**, **28**, **29** have failed. As another example, the user interface **37** may provide data related to calibration. As yet another example, the user interface **37** may display the readings of the car counters **20** and/or parking sensors **26**. The user interface **37** may be visible directly on the central control unit **30**, or may be visible remotely such as through the use of a mobile device **35**.

[0101] Continuing to reference FIG. **12**, it can be seen that parking sensors **26** may be communicatively interconnected with the central control unit **30**. As shown in FIG. **10**, an exemplary parking garage **14** includes a plurality of parking spaces **15** defined by lines on the underlying road surface. In an exemplary embodiment, each of the parking spaces **15** may include its own parking sensor **26**. In other embodiments, only some of the parking spaces **15** may include a parking sensor **26**.

[0102] Each of the parking spaces **15** is communicatively interconnected with the control unit **30**. The parking sensors **26** may be comprised of various types of sensors known in the art to indicate whether an object such as a vehicle **12** is parked in the parking space **15**. In an exemplary embodiment, each parking sensor **26** is adapted to indicate to the central control unit **30** whether the associated parking space **15** is occupied or unoccupied.

[0103] As shown in FIG. **12**, the vehicle flow monitoring system **10** may also include dynamic signage **34**. The signage **34** may provide relevant information processed by the control unit **30**. For example, in a parking garage **14**, the signage **34** may indicate the number of available parking spaces **15** which is detected by use of the parking sensors **26**. In a parking garage **14** without parking sensors **26**, the car counter **20** may instead by utilized to provide the number of available parking spaces **15** to be displayed on the signage **34**.

[0104] Continuing to reference FIG. **12**, it can be seen that mobile devices **35** may be communicatively interconnected with the control unit **30**. The mobile devices **35** may comprise smart phones, smart watches, laptops, and the like. The mobile devices **35** may provide various functionality, such as but not limited to displaying a user interface **37** which may be used for displaying data from the vehicle flow monitoring system **10**. For example, the user interface **37** on the mobile device **35** may display the number of parking spaces **15** which are available in a parking garage **14**. As another example, the user interface **37** on the mobile device **35** may display traffic patterns on a desired roadway.

[0105] The vehicle flow monitoring system **10** may also include guidance lights **36** which will guide vehicles **12** based on information from the car counters **20** and/or parking sensors **26**. For example, the guidance lights **36** may illuminate to guide a vehicle **12** toward parking spaces **15** that are known to be available due to the parking sensors **26**.

It should be appreciated that the guidance lights **36** may provide a wide range of functionality.

E. Operation of Preferred Embodiment.

[0106] FIGS. **14** and **15** illustrate an exemplary method of counting a vehicle **12** passing a point of interest. In the exemplary situation shown in FIGS. **14** and **15**, a vehicle **12** passes the second distance sensor **22** of the car counter **20** first. As the front of the vehicle **12** passes the second distance sensor **22**, the second distance sensor's **22** distance reading will go from above to below the threshold. An Event ID of 4 will thus be entered into the buffer. As the front of the vehicle **12** passes the first distance sensor **21**, the first sensor's **21** distance reading will go from above to below threshold. An Event ID of 1 will be entered in the buffer. At this point, the sum of the two most recent events is equal to 5, so the control unit **30** will recognize that a vehicle **12** is underneath the car counter **20**. The control unit **30** will also know the direction of travel of the vehicle **12** based on the second distance sensor **22** being "triggered" first.

[0107] As shown in FIG. **15**, as the rear of the vehicle **12** passes the second distance sensor **22**, the second distance sensor's **22** distance reading will go from below to above the threshold. An Event ID of 8 will be entered into the buffer. As the rear of the vehicle **12** passes the first distance sensor **21**, the first distance sensor's **21** distance reading will go from below to above threshold. An Event ID of 2 will be entered in the buffer.

[0108] At this point, the sum of the two most recent events is equal to 10, so the control unit **30** will recognize that the vehicle **12** has left the car counter **20**. The control unit **30** will then update the database **31** to reflect the additional vehicle **12** having been counted by updating the car count.

[0109] FIGS. **16** and **17** illustrate an exemplary method of recognizing that a human, rather than a vehicle **12**, has passed the car counter **20**. As the person passes the second distance sensor **22**, the second distance sensor **22** will go from above to below threshold and a 4 will be entered in the buffer. Because the first distance sensor **21** will generally be distally-spaced with respect to the second distance sensor **22**, the second distance sensor **22** will also detect the person leaving from underneath the second distance sensor **22**, resulting in the second distance sensor **22** going from below to above threshold prior to the person reaching the first distance sensor **21**. An Event ID of 8 will be entered in the buffer. As the sum of the most recent events is 12, the control unit **30** will recognize that it was not a vehicle **12** that passed under the car counter **20**. No car count will be added to the database **31**. FIG. **17** illustrates the same method being used in connection with the first distance sensor **21**, which results in Event ID's of (1, 2) which sum to 3 and are similarly recognized by the control unit **30** as a non-vehicle passage.

[0110] FIGS. **18** and **19** illustrate an exemplary method of recognizing a tailgating situation in which either two vehicles **12** are driving dangerously close to each other or a single vehicle **12** has a trailer or other towed apparatus. As the front of the vehicle **12** passes the second distance sensor **22**, an Event ID of 4 is entered into the buffer. As the front of the vehicle **12** passes the first distance sensor **21**, an Event ID of 1 is entered in the buffer. As the rear of the vehicle **12** passes the second distance sensor **22**, an Event ID of 8 is entered in the buffer.

[0111] If the vehicle **12** is towing a trailer, the front of the trailer will then pass the second distance sensor **22**, resulting in an Event ID of 4 being entered into the buffer. The rear of the vehicle **12** will next pass the first distance sensor **21**, resulting in an Event ID of 2 entered in the buffer. The front of the trailer will then pass the first distance sensor **21**, resulting in an Event ID of 1 entered in the buffer. The rear of the trailer will then pass the second distance sensor **22**, resulting in an Event ID of 8 entered in the buffer. Finally, the rear of the trailer will pass the first distance sensor **21**, resulting in an Event ID of 2 being entered in the buffer.

[0112] After both the vehicle **12** and trailer have passed the car counter **20**, the Event buffer will read (4, 1, 8, 4, 2, 1, 8, 2) as outlined above. The control unit **30** will recognize that the sum of three consecutive events (1, 8, 4) is equal to 13, which is representative of a tailgating scenario. The control unit **30** may choose to add only a single car count in such a circumstance or, in some embodiments, may still add a double car count to accommodate for the extra parking space **15** taken by the trailer.

[0113] It should be appreciated that the vehicle flow monitoring system **10** may be utilized in a wide range of settings to provide a wide range of functionality. The control unit **30** will generally collate data from various sensors such as car counters **20** and/or parking sensors **26** to be stored in the database **31** for appropriate system applications.

[0114] For example, car counters **20** may be arranged on a roadway such as a freeway to monitor traffic patterns and loads during different times. This data may be continuously stored in the database **31** to be retrieved when needed. As an example, using this information, traffic engineers can make plans to improve such roadways based on data received and processed by the vehicle flow monitoring system **10**.

[0115] As another example, if a parking garage **14** or parking lot with forty spaces has a single entry and exit point, a car counter **20** may be positioned at both the entry and the exit along with dynamic signage **34** displaying parking availability. As a vehicle **12** enters the parking garage **14**, the car counter **20** will recognize the vehicle's **12** entry and communicate an updated car count to the control unit **30**. The control unit **30** then updates the database **31** and revises the available number of parking spaces **15**, which is displayed on the dynamic signage **34**.

[0116] Similarly, when a vehicle **12** exits the parking garage **14**, the car counter **20** will recognize the vehicle's **12** exit and communicate an updated car count to the control unit **30**. The control unit **30** then updates the database **31** to reflect the exited vehicle **12** and revises the available number of parking spaces **15**, which is updated on the dynamic signage **34**.

[0117] Because the system recognizes vehicle **12** direction of movement, a vehicle **12** entering the parking garage **14** through the exit lane will still be counted as an added car count rather than a subtraction, since the system **10** will recognize that the vehicle **12** entered, rather than exited, the parking garage **14** based on the detected direction of movement of the vehicle **12**.

[0118] In some embodiments, a parking garage **14** or lot may form part of a series of parking areas which are associated with the same complex, such as a hospital or shopping mall. Each of the parking areas may include their own car counters **20** and/or parking sensors **26** so that the dynamic signage **34** and database **31** may be updated with car counts for both the entire complex and for individual parking areas such as parking garages **14**. The system **10** is fully configurable using the control unit **30**. For example, the

system **10** may be configured to use guidance lights **36** to direct motorists to the parking area in the complex with the most available parking spaces **15**.

[0119] As yet another non-limiting example, a car counter **20** may be placed at all entry and exit points for an area of interest such as a central business district of a city. The control unit **30** may then determine the total number of vehicles within the central business district and communicate that information to dynamic signage **34** or store the relevant information for viewing and analysis via a user interface **37**.

[0120] Unless otherwise defined, all technical and scientific terms used herein have the same meaning as commonly understood by one of ordinary skill in the art to which this invention belongs. Although methods and materials similar to or equivalent to those described herein can be used in the practice or testing of the vehicle flow monitoring system, suitable methods and materials are described above. All publications, patent applications, patents, and other references mentioned herein are incorporated by reference in their entirety to the extent allowed by applicable law and regulations. The vehicle flow monitoring system may be embodied in other specific forms without departing from the spirit or essential attributes thereof, and it is therefore desired that the present embodiment be considered in all respects as illustrative and not restrictive. Any headings utilized within the description are for convenience only and have no legal or limiting effect.

What is claimed is:

1. A vehicle monitoring system for detecting a vehicle, comprising:

a first distance sensor oriented towards a first point of interest, wherein the first distance sensor is configured to detect the vehicle passing the first distance sensor;

a second distance sensor oriented towards a second point of interest, wherein the second distance sensor is configured to detect the vehicle passing the second distance sensor, wherein the first point of interest is distally-spaced with respect to the second point of interest; and

a microcontroller in communication with the first distance sensor and the second distance sensor, wherein the microcontroller is configured to compare a first distance reading detected by the first distance sensor to a first threshold value for the first distance sensor, and wherein the microcontroller is configured to compare a second distance reading detected by the second distance sensor to a second threshold value for the second distance sensor;

wherein the microcontroller is configured to increase a vehicle count when the first distance reading is less than the first threshold value and the second distance reading is less than the second threshold value.

2. The vehicle monitoring system of claim **1**, wherein the microcontroller is configured to detect direction of movement of the vehicle based on which of the first distance sensor or the second distance sensor is passed by the vehicle first.

3. The vehicle monitoring system of claim **1**, wherein the first distance sensor and the second distance sensor are each comprised of a LIDAR sensor.

4. The vehicle monitoring system of claim **1**, wherein the first threshold value is configured to be beyond a noise level of an unobstructed distance reading of the first distance sensor.

5. The vehicle monitoring system of claim **4**, wherein the second threshold value is configured to be beyond a noise level of an unobstructed distance reading of the second distance sensor.

6. The vehicle monitoring system of claim **1**, wherein the first distance sensor and the second distance sensor are positioned above the first point of interest and the second point of interest respectively.

7. The vehicle monitoring system of claim **1**, wherein the first distance sensor is distally-spaced with respect to the second distance sensor, wherein both the first distance sensor and the second distance sensor are vertically-oriented.

8. The vehicle monitoring system of claim **1**, wherein the first distance sensor is adjacent with respect to the second distance sensor, wherein both the first distance sensor and the second distance sensor are diagonally-oriented.

9. The vehicle monitoring system of claim **1**, further comprising a third distance sensor and a fourth distance sensor, wherein the first distance sensor and the second distance sensor monitor a first lane of traffic, and wherein the third distance sensor and the fourth distance sensor monitor a second lane of traffic.

10. The vehicle monitoring system of claim **1**, wherein a distance between the first point of interest and the second point of interest is shorter than a length of the vehicle.

11. The vehicle monitoring system of claim **1**, wherein the first distance sensor and the second distance sensor are configured to take distance measurements simultaneously.

12. The vehicle monitoring system of claim **1**, wherein the first threshold value of the first distance sensor is calibrated based on noise readings from the first distance sensor and the second threshold value of the second distance sensor is calibrated based on noise readings from the second distance sensor.

13. The vehicle monitoring system of claim **1**, wherein the microcontroller is configured to classify transitions from unobstructed measurements to obstructed measurements by each of the first distance sensor and the second distance sensor as an event.

14. The vehicle monitoring system of claim **13**, wherein the microcontroller is configured to assign an Event ID to the event detected by the first distance sensor and the second distance sensor.

15. The vehicle monitoring system of claim **14**, wherein the microcontroller is configured to recognize when a non-vehicle object has passed the first distance sensor or the second distance sensor such that the non-vehicle object is not counted.

16. The vehicle monitoring system of claim **14**, wherein the microcontroller is configured to identify when the vehicle has a trailer based on a sequence of Event ID's.

17. The vehicle monitoring system of claim **1**, wherein the microcontroller is configured to reset the first distance sensor and the second distance sensor after a period of time has passed.

18. A vehicle monitoring system for detecting a vehicle entering or leaving a parking area, comprising:

a first distance sensor oriented towards a first point of interest, wherein the first distance sensor is configured to detect the vehicle passing the first distance sensor;

a second distance sensor oriented towards a second point of interest, wherein the second distance sensor is configured to detect the vehicle passing the second distance sensor, wherein the first point of interest is distally-spaced with respect to the second point of interest;

a dynamic signage positioned within the parking area;

a microcontroller in communication with the first distance sensor and the second distance sensor, wherein the microcontroller is configured to compare a first distance reading detected by the first distance sensor to a first threshold value for the first distance sensor, and wherein the microcontroller is configured to compare a second distance reading detected by the second distance sensor to a second threshold value for the second distance sensor;

wherein the microcontroller is configured to increase a vehicle count when the first distance reading is less than the first threshold value and the second distance reading is less than the second threshold value;

wherein the dynamic signage is configured to display the vehicle count.

19. The vehicle monitoring system of claim **18**, wherein the dynamic signage is configured to display a number of parking spaces of the parking area which are available.

20. A vehicle monitoring system, comprising:

a first distance sensor oriented towards a first point of interest, wherein the first distance sensor is configured to detect the vehicle passing the first distance sensor;

a second distance sensor oriented towards a second point of interest, wherein the second distance sensor is configured to detect the vehicle passing the second distance sensor, wherein the first point of interest is distally-spaced with respect to the second point of interest; and

a microcontroller in communication with the first distance sensor and the second distance sensor, wherein the microcontroller is configured to detect when a first distance reading detected by the first distance sensor is less than a first threshold value for the first distance sensor, and wherein the microcontroller is configured to detect when a second distance reading detected by the second distance sensor is less than a second threshold value for the second distance sensor;

wherein the microcontroller is configured to increase a vehicle count when the first distance reading is less than the first threshold value and the second distance reading is less than the second threshold value.

* * * * *